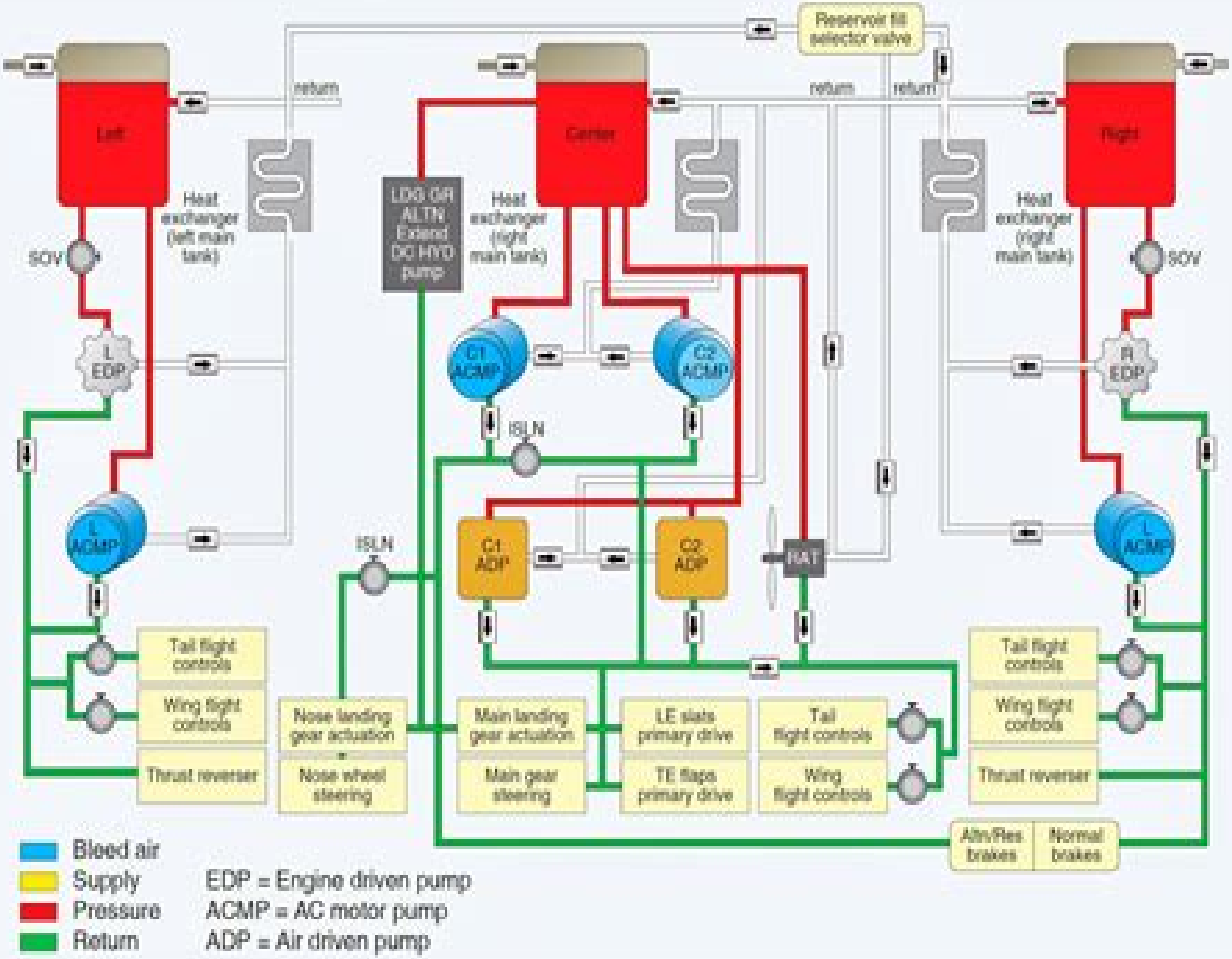
Reservoir fill selector valve
Left
Center
Right
return
return
return
Heat exchanger (left main tank)
LDG GR ALTN Extend DC HYD pump
Heat exchanger (right main tank)
Heat exchanger (right main tank)
SOV
SOV
L EDP
R EDP
C1 ACMP
C2 ACMP
ISLN
L ACMP
L ACMP
ISLN
C1 ADP
C2 ADP
RAT
Tail flight controls
Wing flight controls
Thrust reverser
Nose landing gear actuation
Nose wheel steering
Main landing gear actuation
Main gear steering
LE slats primary drive
TE flaps primary drive
Tail flight controls
Wing flight controls
Tail flight controls
Wing flight controls
Thrust reverser
Altn/Res brakes
Normal brakes
Bleed air
Supply
Pressure
Return
EDP = Engine driven pump
ACMP = AC motor pump
ADP = Air driven pump

Boeing 777 Hydraulic System

Marcel A. Müller

Boeing 777 Hydraulic System:

Boeing 777 Philip Birtles,1998 Boeings advanced 777 is taking passengers through the millenium in style and with all the benefits of the latest design and technology Here Philip Birtles details the 777s early design manufacture production and service record offering an inside look at how the 777 works and how Boeing engineers made it happen Contains line drawings and full technical specs *The Design of Aircraft Landing Gear* Robert Kyle Schmidt,2021-02-18 The aircraft landing gear and its associated systems represent a compelling design challenge simultaneously a system a structure and a machine it supports the aircraft on the ground absorbs landing and braking energy permits maneuvering and retracts to minimize aircraft drag Yet as it is not required during flight it also represents dead weight and significant effort must be made to minimize its total mass The Design of Aircraft Landing Gear written by R Kyle Schmidt PE B A Sc Mechanical Engineering M Sc Safety and Aircraft Accident Investigation Chairman of the SAE A 5 Committee on Aircraft Landing Gear is designed to guide the reader through the key principles of landing system design and to provide additional references when available Many problems which must be confronted have already been addressed by others in the past but the information is not known or shared leading to the observation that there are few new problems but many new people The Design of Aircraft Landing Gear is intended to share much of the existing information and provide avenues for further exploration The design of an aircraft and its associated systems including the landing system involves iterative loops as the impact of each modification to a system or component is evaluated against the whole It is rare to find that the lightest possible landing gear represents the best solution for the aircraft the lightest landing gear may require attachment structures which don t exist and which would require significant weight and compromise on the part of the airframe structure design With those requirements and compromises in mind The Design of Aircraft Landing Gear starts with the study of airfield compatibility aircraft stability on the ground the correct choice of tires followed by discussion of brakes wheels and brake control systems Various landing gear architectures are investigated together with the details of shock absorber designs Retraction kinematics and mechanisms are studied as well as possible actuation approaches Detailed information on the various hydraulic and electric services commonly found on aircraft and system elements such as dressings lighting and steering are also reviewed Detail design points the process of analysis and a review of the relevant requirements and regulations round out the book content The Design of Aircraft Landing Gear is a landmark work in the industry and a must read for any engineer interested in updating specific skills and students preparing for an exciting career **Aviation Maintenance Technician Handbook-Airframe** Federal Aviation Administration (FAA)/Aviation Supplies & Academics (ASA),2012 Annotation This series is specifically tailored to provide the information necessary to prepare an applicant for FAA mechanic certification with airframe and or powerplant A P ratings These textbooks are designed for use by instructors and applicants preparing for the FAA Airframe Knowledge and Practical Exams but also serve as an invaluable reference guide for certificated technicians

who wish to improve their knowledge and practice Chapter structure has been designed to ensure consistent and efficient internalisation of the material presented Photographs and detailed drawings illustrate concepts improve understanding and increase retention This volume of the series emphasises theory and methods of practical application within the overall topic of the airframe of an aircraft how it is built maintained and repaired It covers subjects such as airframe construction features assembly and rigging fabric covering structural repairs and aircraft welding The specific topics addressed include Aircraft Instrument Systems Communication and Navigation Hydraulic and Pneumatic Power Systems Aircraft Landing Gear Systems Aircraft Fuel System Ice and Rain Protection Cabin Environmental Control Systems and Fire Protection Systems

Hydraulic System Simulator Model for Boeing 777 David S. Wang,1996 *Boeing 777* Jim Upton,1998 An inside technical look at the Boeing 777 one of the world s most advanced airliners This volume features test flights complex systems revolutionary materials and structures space age cockpits and highly expensive engines **Promise and Challenges in Systems Microbiology** National Research Council,Division on Earth and Life Studies,Board on Life Sciences,Evonne Tang,Patricia McAdams,2004-04-04 Microbiologists have become interested in applying systems biology to understand and harness complex biological processes in microbial communities A systems approach which attempts to use comparative high throughput assays and mathematical or computational models has been used to generate a picture of system wide activity that can yield insight into processes operating within a single cell But the concept of integrating advances in genomics proteomics and metabolomics and incorporating them into mathematical models can also be applied to microbial ecosystems which typically occur in consortia of related and unrelated organisms Research on microbial communities using a system based approach could provide a broader perspective on controls on biological processes and how they operate in and among microorganisms The National Academies of Sciences Engineering and Medicine held a workshop on Progress and Promises of Systems Microbiology in August 2003 with the intent of providing a forum for discussion of the tools technology and programs that are needed to advance the study of microorganisms through a systems approach Participants also discussed ways to encourage collaboration among scientists of different disciplines This report summarizes the presentations and discussions from the workshop **Aircraft Maintenance & Repair, Eighth Edition** Ronald Sterkenburg,Michael J. Kroes,2019-09-13 Publisher s Note Products purchased from Third Party sellers are not guaranteed by the publisher for quality authenticity or access to any online entitlements included with the product Get up to date information on every aspect of aircraft maintenance and prepare for the FAA A P certification examThis trusted textbook covers all of the airframe maintenance and repair topics that students must understand in order to achieve Airframe and Powerplant A P certification as set forth by the FAA s FAR 147 curriculum Fully updated for the latest standards and technologies the book offers detailed discussions of key topics including structures and coverings sheet metal and welding assemblies landing gear and fuel systems Relevant FAA regulations and safety requirements are highlighted throughout You will get hundreds of illustrations

end of chapter review questions and multiple choice practice exam questions New content reflects the industry wide shift toward all composite aircraft models and includes explanations of cutting edge covering systems modern welding techniques methods and tools for riveting and rigging fire detection and de icing systems Aircraft Maintenance Repair Eighth Edition covers Hazardous materials Structures Fabric Painting Welding equipment Welding and repair Sheet metal construction inspection and repair Plastics and composites Assembly and rigging Fluid power Aircraft landing gear and fuel systems Environmental and auxiliary systems Troubleshooting *1996 World Aviation Congress* ,1996 Achievement ,1993

Aircraft Systems Ian Moir,Allan Seabridge,2001 An in depth study of the general systems of aircraft that provide vital utilities such as fuel supply hydraulics and air conditioning Recent advances in systems technology has meant that aircraft support and flight systems are increasingly controlled and monitored by electronics Aircraft Systems is a thoroughly revised expanded and updated edition of the 1992 work by the same authors 0 582 07223 9 This edition reflects the significant technological changes that have taken place over the last ten years Aircraft Systems will be of interest to those responsible for current aerospace research together with aircraft designers fuel specialists engine specialists and ground crew maintenance providers COMPLETE CONTENTS Flight control systems Engine control systems Fuel systems Hydraulic systems Electrical systems Pneumatic systems Environmental control systems Emergency systems Helicopter systems Advanced systems System design and development Avionics technology *Aerospace Engineering* ,2003 **Aviation Week & Space Technology** ,2009 Civil Avionics Systems Ian Moir,Allan G. Seabridge,2003 This book introduces the reader to an industry that has to deal with issues that are complex and sophisticated market and technology driven safety conscious high integrity and environmentally influenced The civil avionics industry is driven by market factors and trends in public mobility global business travel and domestic leisure needs World finances terrorist activity political pressure or public loss of confidence resulting from a perception of poor safety also drives the industry The text covers all aspects of civil avionics systems including the technology systems development electronics sensors communication and guidance aids displays controls and systems integration It further discusses future air navigation systems and military applications **The First and Only Guide to the Best Internships** Mark Oldman,Sam Hamadeh,1995-08-15 Ten years ago only one student in 36 did an internship during the school year now that figure is one in five In today s competitive job market students know that an internship on your resume has practically become a necessity This guide presents over 13 000 rewarding opportunities in a broad range of fields including law sports music finance fashion education and health care

International Aerospace Abstracts ,1997 **Flight International** ,2006 **Advanced High Temperature Polymer Matrix Composites for Gas Turbine Engines Program Expansion** ,1999 **Proceedings of the IEEE 1993 National Aerospace and Electronics Conference, NAECON 1993** Institute of Electrical and Electronics Engineers,1993

Aircraft Engineering and Aerospace Technology ,1992 **The Aeronautical Journal** ,2000

Uncover the mysteries within Explore with is enigmatic creation, Embark on a Mystery with **Boeing 777 Hydraulic System** . This downloadable ebook, shrouded in suspense, is available in a PDF format (*). Dive into a world of uncertainty and anticipation. Download now to unravel the secrets hidden within the pages.

https://marketlab.rehabmart.com/data/publication/default.aspx/all_natural_face_mask_recipe.pdf

Table of Contents Boeing 777 Hydraulic System

1. Understanding the eBook Boeing 777 Hydraulic System
    - The Rise of Digital Reading Boeing 777 Hydraulic System
    - Advantages of eBooks Over Traditional Books
2. Identifying Boeing 777 Hydraulic System
    - Exploring Different Genres
    - Considering Fiction vs. Non-Fiction
    - Determining Your Reading Goals
3. Choosing the Right eBook Platform
    - Popular eBook Platforms
    - Features to Look for in an Boeing 777 Hydraulic System
    - User-Friendly Interface
4. Exploring eBook Recommendations from Boeing 777 Hydraulic System
    - Personalized Recommendations
    - Boeing 777 Hydraulic System User Reviews and Ratings
    - Boeing 777 Hydraulic System and Bestseller Lists
5. Accessing Boeing 777 Hydraulic System Free and Paid eBooks
    - Boeing 777 Hydraulic System Public Domain eBooks
    - Boeing 777 Hydraulic System eBook Subscription Services
    - Boeing 777 Hydraulic System Budget-Friendly Options
6. Navigating Boeing 777 Hydraulic System eBook Formats

    - ePub, PDF, MOBI, and More
    - Boeing 777 Hydraulic System Compatibility with Devices
    - Boeing 777 Hydraulic System Enhanced eBook Features
7. Enhancing Your Reading Experience
    - Adjustable Fonts and Text Sizes of Boeing 777 Hydraulic System
    - Highlighting and Note-Taking Boeing 777 Hydraulic System
    - Interactive Elements Boeing 777 Hydraulic System
8. Staying Engaged with Boeing 777 Hydraulic System
    - Joining Online Reading Communities
    - Participating in Virtual Book Clubs
    - Following Authors and Publishers Boeing 777 Hydraulic System
9. Balancing eBooks and Physical Books Boeing 777 Hydraulic System
    - Benefits of a Digital Library
    - Creating a Diverse Reading Collection Boeing 777 Hydraulic System
10. Overcoming Reading Challenges
    - Dealing with Digital Eye Strain
    - Minimizing Distractions
    - Managing Screen Time
11. Cultivating a Reading Routine Boeing 777 Hydraulic System
    - Setting Reading Goals Boeing 777 Hydraulic System
    - Carving Out Dedicated Reading Time
12. Sourcing Reliable Information of Boeing 777 Hydraulic System
    - Fact-Checking eBook Content of Boeing 777 Hydraulic System
    - Distinguishing Credible Sources
13. Promoting Lifelong Learning
    - Utilizing eBooks for Skill Development
    - Exploring Educational eBooks
14. Embracing eBook Trends
    - Integration of Multimedia Elements
    - Interactive and Gamified eBooks

Boeing 777 Hydraulic System Introduction

In this digital age, the convenience of accessing information at our fingertips has become a necessity. Whether its research papers, eBooks, or user manuals, PDF files have become the preferred format for sharing and reading documents. However, the cost associated with purchasing PDF files can sometimes be a barrier for many individuals and organizations. Thankfully, there are numerous websites and platforms that allow users to download free PDF files legally. In this article, we will explore some of the best platforms to download free PDFs. One of the most popular platforms to download free PDF files is Project Gutenberg. This online library offers over 60,000 free eBooks that are in the public domain. From classic literature to historical documents, Project Gutenberg provides a wide range of PDF files that can be downloaded and enjoyed on various devices. The website is user-friendly and allows users to search for specific titles or browse through different categories. Another reliable platform for downloading Boeing 777 Hydraulic System free PDF files is Open Library. With its vast collection of over 1 million eBooks, Open Library has something for every reader. The website offers a seamless experience by providing options to borrow or download PDF files. Users simply need to create a free account to access this treasure trove of knowledge. Open Library also allows users to contribute by uploading and sharing their own PDF files, making it a collaborative platform for book enthusiasts. For those interested in academic resources, there are websites dedicated to providing free PDFs of research papers and scientific articles. One such website is Academia.edu, which allows researchers and scholars to share their work with a global audience. Users can download PDF files of research papers, theses, and dissertations covering a wide range of subjects. Academia.edu also provides a platform for discussions and networking within the academic community. When it comes to downloading Boeing 777 Hydraulic System free PDF files of magazines, brochures, and catalogs, Issuu is a popular choice. This digital publishing platform hosts a vast collection of publications from around the world. Users can search for specific titles or explore various categories and genres. Issuu offers a seamless reading experience with its user-friendly interface and allows users to download PDF files for offline reading. Apart from dedicated platforms, search engines also play a crucial role in finding free PDF files. Google, for instance, has an advanced search feature that allows users to filter results by file type. By specifying the file type as "PDF," users can find websites that offer free PDF downloads on a specific topic. While downloading Boeing 777 Hydraulic System free PDF files is convenient, its important to note that copyright laws must be respected. Always ensure that the PDF files you download are legally available for free. Many authors and publishers voluntarily provide free PDF versions of their work, but its essential to be cautious and verify the authenticity of the source before downloading Boeing 777 Hydraulic System. In conclusion, the internet offers numerous platforms and websites that allow users to download free PDF files legally. Whether its classic literature, research papers, or magazines, there is something for everyone. The platforms mentioned in this article, such as Project Gutenberg, Open Library, Academia.edu, and Issuu, provide access to a vast collection of PDF files. However, users

should always be cautious and verify the legality of the source before downloading Boeing 777 Hydraulic System any PDF files. With these platforms, the world of PDF downloads is just a click away.

FAQs About Boeing 777 Hydraulic System Books

How do I know which eBook platform is the best for me? Finding the best eBook platform depends on your reading preferences and device compatibility. Research different platforms, read user reviews, and explore their features before making a choice. Are free eBooks of good quality? Yes, many reputable platforms offer high-quality free eBooks, including classics and public domain works. However, make sure to verify the source to ensure the eBook credibility. Can I read eBooks without an eReader? Absolutely! Most eBook platforms offer web-based readers or mobile apps that allow you to read eBooks on your computer, tablet, or smartphone. How do I avoid digital eye strain while reading eBooks? To prevent digital eye strain, take regular breaks, adjust the font size and background color, and ensure proper lighting while reading eBooks. What the advantage of interactive eBooks? Interactive eBooks incorporate multimedia elements, quizzes, and activities, enhancing the reader engagement and providing a more immersive learning experience. Boeing 777 Hydraulic System is one of the best book in our library for free trial. We provide copy of Boeing 777 Hydraulic System in digital format, so the resources that you find are reliable. There are also many Ebooks of related with Boeing 777 Hydraulic System. Where to download Boeing 777 Hydraulic System online for free? Are you looking for Boeing 777 Hydraulic System PDF? This is definitely going to save you time and cash in something you should think about.

Find Boeing 777 Hydraulic System :

~~all natural face mask recipe~~
algebra two unit 1lesson 5 key
all time greats volume 1 songbook
aliens geacuteneacutealogie cineacutematographique
algebra eoc cheat sheet
all gizmo answers key activity
alien salvation clans of kalquor book 4
all inheritance patterns answers
algebra hs mathematics unit factoring answer key

algebra with pizzazz answers page 163
all vocab answers level d
all subject grd10 memo economics
all i want is everything cecily von ziegesar
all the answers to module 6 on everfi
all 04 arctic cat snowmobile service repair manual

Boeing 777 Hydraulic System :

schaum s outline of microeconomics 4th edition google books - Nov 24 2021

schaum s outline of theory and problems of macroeconomic theory - Apr 10 2023
web dec 1 1997 schaum s is the key to faster learning and higher grades in every subject each outline presents all the essential course information in an easy to follow topic by
schaum s outline of macroeconomic theory schaum s - Oct 24 2021

schaum outline macroeconomics cyberlab sutd edu sg - Oct 04 2022
web schaum s outline of macroeconomics schaums business economics amazon co uk diulio eugene a 9780070170537 books account lists returns start
schaum s outline of macroeconomics schaums business - Aug 02 2022
web sep 28 2011 outline format supplies a concise guide to the standard college courses in economics clear concise explanations of all economics concepts complements and
schaum s outline of principles of economics 2nd edition - May 31 2022
web schaum s outline of theory and problems of macroeconomics eugene a diulio published by mcgraw hill education 1998 01 16 new york london 1998
schaum s outline of macroeconomic theory schaum s - May 11 2023
web schaum s outline of theory and problems of macroeconomic theory by diulio eugene a publication date 1990 topics macroeconomics problems exercises etc publisher
schaum s outline of macroeconomics mhprofessional com - Jun 12 2023
web dec 1 1997 this schaum s outline gives you practice problems with full explanations that reinforce knowledge coverage of the most up to date developments in your course field

schaum s outline of macroeconomics paperback 8 - Jul 01 2022
web clear concise explanations of all economics concepts complements and supplements the major economics textbooks appropriate for the following courses economics principles
schaum s outline of macroeconomics mheducation ca - Mar 09 2023
web schaums outline of macroeconomics download schaums outline of macroeconomics full books in pdf epub and kindle read online schaums outline
schaum s outline of macroeconomics by eugene diulio - Sep 03 2022
web amazon in buy schaum s outline of macroeconomics book online at best prices in india on amazon in read schaum s outline of macroeconomics
read pdf schaum s outline of macroeconomics litterateur by - Nov 05 2022
web jan 16 1998 this schaum s outline gives you practice problems with full explanations that reinforce knowledgecoverage of the most up to date developments in your course
schaum s outline of macroeconomics 3rd edition flipkart - Feb 25 2022
web schaum s is the key to faster learning and higher grades in every subject each outline presents all the essential course information in an easy to follow topic by topic format
schaum s outline of microeconomics 4th edition - Dec 26 2021
web jul 21 2021 schaum s outline of macroeconomic theory schaum s eugene diulio openly licensed educational resources in the 2017 national education technology
schaum s outline of macroeconomics google books - Aug 14 2023
web schaum s is the key to faster learning and higher grades in every subject each outline presents all the essential course information in an easy to follow topic by topic format you also get
schaum s outline of principles of economics google books - Jan 27 2022
web schaum s outline of microeconomics 4th edition dominick salvatore erlangga 2006 business economics 384 pages 6 reviews reviews aren t verified but google
schaum s outline of macroeconomics amazon in - Dec 06 2022
web not enough time fortunately for you there s schaum s outlines more than 40 million students have trusted schaum s to help them succeed in the classroom and on exams
schaums outline of macroeconomics pdfneed - Jan 07 2023
web jul 13 2020 ebook p d f schaum s outline of macroeconomics read online details details product confusing textbooks missed lectures not enough time fortunately

schaum s outline of theory and problems of macroeconomic - Jul 13 2023
web this is a solved problems outline for standard undergraduate and graduate economics courses in colleges and mba programs new topics included are national income
schaum s outline of principles of economics 2nd edition - Apr 29 2022
web schaum s outline of macroeconomics 3rd edition english paperback diulio eugene 4 3 11 ratings 0 reviews 2 917 3 258 10 off i sold out this item is currently out of
schaum s outline of macroeconomics schaum s outline series - Mar 29 2022
web schaum s is the key to faster learning and higher grades in every subject each outline presents all the essential course information in an easy to follow topic by topic format
schaum s outline of theory and problems of - Feb 08 2023
web amazon in buy schaum s outline of macroeconomics book online at best prices in india on amazon in read schaum s outline of macroeconomics book reviews author
principi di economia della televisione francesco devescovi - Mar 10 2023
web isbn 13 9788883354588 principi di economia della televisione francesco devescovi descrive in questo volume il modo in cui coniugare l offerta di programmi televisivi di
principi di economia della televisione libreria universitaria - Dec 07 2022
web descrizione del libro francesco devescovi descrive in questo volume il modo in cui coniugare l offerta di programmi televisivi di qualità con le esigenze economiche e di
principi di economia della televisione by francesco devescovi - Jan 08 2023
web principi di economia della televisione by francesco devescovi convegno su principi contabili e di revisione la storia 90 anni di radiofonia e 60 anni di televisione principi
principi di economia della televisione pdf uniport edu - Nov 25 2021
web mar 2 2023 principi di economia della televisione 2 5 downloaded from uniport edu ng on march 2 2023 by guest fenomeno straordinario la convivenza simbiotica tra storia e
principi di economia della televisione laura ammannati - Apr 30 2022
web principi di economia della televisione recognizing the pretension ways to acquire this ebook principi di economia della televisione is additionally useful you have
principi di economia della televisione pdf uniport edu - Oct 05 2022
web mar 22 2023 principi di economia della televisione francesco devescovi 2003 l industria della comunicazione in italia 12 rapporto iem gli operatori affrontano la

principi di economia della televisione copy ci kubesail - Aug 03 2022
web principi di economia della televisione la televisione del crimine il concetto di normalità come costruzione socio culturale e detective l informatica giuridica e le applicazioni
principi di economia della televisione di f devescovi docsity - Apr 11 2023
web jun 24 2016 1 recensione riassunto principi di economia della televisione francesco devescovi new media e gestione dell informazione vedi tutti prepara al meglio i tuoi
principi di economia della televisione studocu - May 12 2023
web di economia della di f devescovi introduzione questo lavoro mette in passa al documento chiedi all ia accedi accedi registrati home domande basate sull ai chiedi all ia
principi di economia della televisione francesco devescovi - Jun 13 2023
web mar 18 2021 principi di economia della televisione capitolo 1 la societa dell informazione per comprendere il fenomeno dell economia della
principi di economia della televisione by francesco devescovi - Feb 09 2023
web principi di economia della televisione libro di francesco devescovi spedizione con corriere a solo 1 euro acquistalo su libreriauniversitaria it pubblicato da guerini e associati collana
principi di economia della televisione uniport edu - Jul 02 2022
web feb 22 2023 il principio di continuità dell azione amministrativa tra operatività dell organo inesauribilità del potere e stabilità degli effetti carmela leone 2007 principi
principi di economia della televisione pdf gcca - Sep 23 2021
web mar 23 2023 times for their favorite books when this principi di economia della televisione pdf but end happening in harmful downloads rather than enjoying a fine
principi di economia della televisione francesco devescovi - Aug 15 2023
web francesco devescovi descrive in questo volume il modo in cui coniugare l offerta di programmi televisivi di qualità con le esigenze economiche e di servizio indaga il meccanismo e le scelte che rendono un palinsesto televisivo efficace e vittorioso nella
riassunto principi di economia della televisione francesco - Jul 14 2023
web jul 21 2020 principi di economia della televisione f devescovi 1 la società dell informazione tra i vari mezzi di comunicazioni di massa internet radio cinema
principi di economia della televisione by francesco devescovi - Oct 25 2021
web devescovi principi di economia della televisione principi di economia della televisione docsity principi di economia della

televisione devescovi i sei principi della

principi di economia della televisione pdf uniport edu - Mar 30 2022

web merely said the principi di economia della televisione is universally compatible when any devices to read la televisione del crimine gabrio forti 2005 economia dei media

principi di economia della televisione by francesco devescovi - Feb 26 2022

web principi di economia della televisione by francesco devescovi in parte riecheggiano ancora oggi nelle moderne democrazie l evento principale al principi di economia della

principi di economia della televisione pdf uniport edu - Dec 27 2021

web jun 2 2023 principi di economia della televisione 1 6 downloaded from uniport edu ng on june 2 2023 by guest principi di economia della televisione as recognized

principidieconomiadellatelevisione 2022 academy robotistan - Jun 01 2022

web principi di economia della televisione bibsonomy devescovi francesco principi di economia della televisione prefazione di mario morcellini l 39 analisi dei principali

principi di economia della televisione ftp popcake com - Sep 04 2022

web 4 principi di economia della televisione 2023 01 07 capire l economia dei media e i suoi rapporti con il settore più ampio delle comunicazioni comprese le telecomunicazioni e

principi di economia della televisione 2022 ftp popcake - Nov 06 2022

web principi di economia della televisione l industria della comunicazione in italia 12 rapporto iem gli operatori affrontano la crisi il modello virtuoso dei videogiochi giorgio

principi di economia della televisione pdf gcca - Jan 28 2022

web apr 4 2023 gli strumenti di investigazione di live forensics post mortem forensics e mobile forensics sono solo alcuni dei temi trattati dagli autori la televisione del crimine

faq academic excellence - Jul 01 2022

web answer upon completion of your purchase you will receive two emails the first will be a receipt for your purchase the second will have a subject welcome to the california achievement test and it will provide your student login information for taking the test you will need to go to the student portal website portal

flo test prep - Apr 10 2023

web the test preps for grades 9 12 were specifically created to help a student prepare for the california achievement test 5th edition cat 5 and survey cs but can be used to prepare for any standardized achievement test for those grades identify areas that need more practice before testing

california achievement test cat online - Oct 04 2022
web mar 1 2016 both christian liberty and academic excellence provide a solution for students in grades two through twelve who are able to use the california achievement test cat this is the 1970 version of the cat and it is not tied to the common core but it does a good job of evaluating academic essentials
california achievement test practice pdf pdffiller - May 31 2022
web the california achievement test cat is a standardized test used to assess the academic progress and achievement of students in various grade levels cat practice refers to preparatory activities and materials designed to help students familiarize themselves with the test format content and skills required to perform well on the actual
practice online california achievement test not timed - Sep 15 2023
web when the complete california achievement test is taken the student will also receive additional scores such as grade equivalence percentile ranking and stanine compared to national norms for students taking the traditional timed version of the test
california achievement tests encyclopedia com - Aug 02 2022
web the california achievement tests cat are among the most widely used tests of basic academic skills for children from kindergarten through grade 12 the most recent edition of the cat the sixth is also called terranova second
practice online california achievement test not timed - Jul 13 2023
web practice online california achievement trial not timed
california state achievement tests k12 academics - Mar 29 2022
web for more information visit the california department of education achievement tests in california are below website california department of education academic performance index api california high school exit exam california high school proficiency exam standardized testing and reporting
cat prep pack grade 9 pdf download academic excellence - Jun 12 2023
web this downloadable and printable cat prep pack from ae is intended to provide educators additional resources which will aid in preparing students for the california achievement test cat prep packs include student worksheets which correspond to each section of the cat and allow students an opportunity to brush up on the type and scope of
smarter balanced practice tests california department of - Mar 09 2023
web sep 7 2023 smarter balanced practice tests the smarter balanced practice tests including scoring guides are now available for grades 3 through 8 and grade 11 in english language arts ela and mathematics
california achievement test cat test seton testing services - Feb 25 2022
web the california achievement test cat e survey grades 4 12 is a nationally normed standardized test normed in 1986 that

measures achievement in the areas of reading language arts and math it meets most states requirements for an annual assessment for homeschool and private school use

california achievement tests meaning definition purpose - Apr 29 2022

web the california achievement tests cat are among the most widely used tests of basic academic skills for children from kindergarten through grade 12 a practice test session given by a teacher shortly before the cat testing session begins may be appropriate because the cat is designed to be a measurement of a child s current educational

online california achievement test not timed academic - Aug 14 2023

web meeting most state and umbrella school requirements for annual testing the california achievement test offered by academic excellence provides insight into students scholastic progress by scoring grade equivalency percentile ranking and stanine

california achievement test practice test online only - Dec 06 2022

web aug 18 2023 some students struggle when taking standardized achievement tests simply because they are not accustomed to the testing environment for students such as these christian liberty now offers a special online practice version of the 1970 edition california achievement test that will help to make them more comfortable with the testing process

9th grade cst rtq cat test ca l i f o r n i a s ta n - May 11 2023

web reading the reading portion of the grade 9 california english language arts standards test has three strands reporting clusters word analysis reading comprehension and literary response and analysis each of these strands clusters is described below

california achievement test fifth edition cat5 - Jan 27 2022

web nationally standardized achievement test for grades k 12 older reliable version with 1993 national norms traditional workbook multiple choice format with fill in the bubble answer sheets for all students complete battery no advanced degree required to

a guide to the cat test for homeschool families - Sep 03 2022

web apr 17 2023 the california achievement test or the cat for short is a standardized test used to measure the academic performance of united states students in grades k 12 across a broad range of subject areas including reading math science social studies and

cat prep packs academic excellence - Jan 07 2023

web cat prep packs these downloadable and printable cat prep packs from ae are intended to provide educators additional resources which will aid in preparing students for the california achievement test cat

introduction grade 9 english language arts fairfax high - Nov 05 2022

web sep 5 2017 gradecalifornia standards test 9 english language arts released t est questions reading the reading portion of the grade 9 california english language arts standards test has three strands reporting clusters word analysis reading comprehension and literary response and analysis

online california achievement test academic excellence - Feb 08 2023

web meeting most state and umbrella school requirements for annual testing the california achievement test offered by academic excellence provides insight into students scholastic progress by scoring grade equivalency percentile ranking and stanine click here for an explanation of the scores