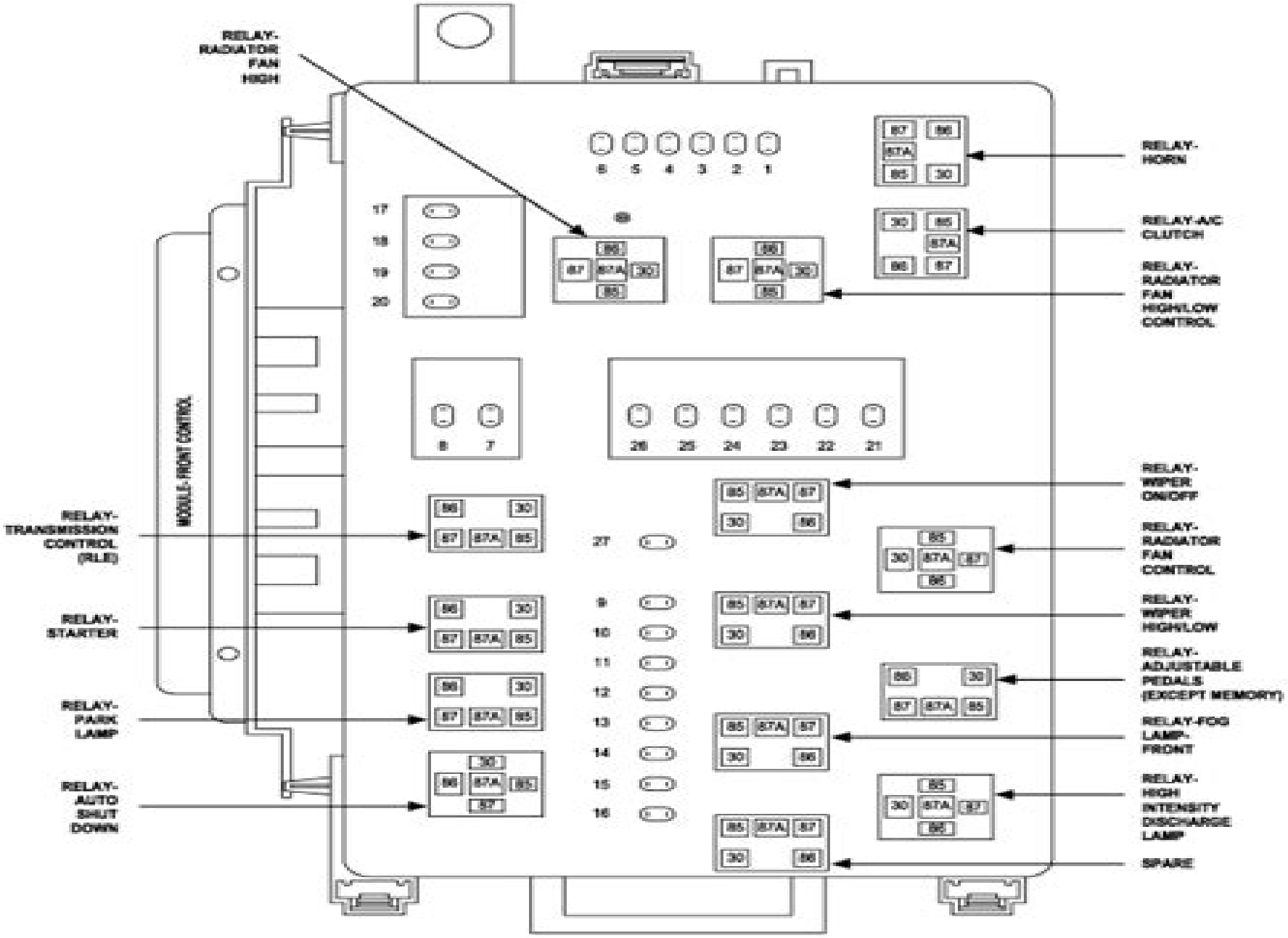
RELAY-RADIATOR FAN HIGH
RELAY-HORN
RELAY-A/C CLUTCH
RELAY-RADIATOR FAN HIGH/LOW CONTROL
MODULE- FRONT CONTROL
RELAY-WIPER ON/OFF
RELAY-TRANSMISSION CONTROL (RLE)
RELAY-RADIATOR FAN CONTROL
RELAY-STARTER
RELAY-WIPER HIGH/LOW
RELAY-ADJUSTABLE PEDALS (EXCEPT MEMORY)
RELAY-PARK LAMP
RELAY-FOG LAMP-FRONT
RELAY-AUTO SHUT DOWN
RELAY-HIGH INTENSITY DISCHARGE LAMP
SPARE

2006 Chrysler 300 Fuse Box Layout

Michael Seilmaier

2006 Chrysler 300 Fuse Box Layout:

Uncover the mysteries within is enigmatic creation, **2006 Chrysler 300 Fuse Box Layout** . This downloadable ebook, shrouded in suspense, is available in a PDF format (*). Dive into a world of uncertainty and anticipation. Download now to unravel the secrets hidden within the pages.

https://marketlab.rehabmart.com/results/virtual-library/HomePages/Craftsman%207%201%204%20Circular%20Saw%20Manual.pdf

Table of Contents 2006 Chrysler 300 Fuse Box Layout

1. Understanding the eBook 2006 Chrysler 300 Fuse Box Layout
    - The Rise of Digital Reading 2006 Chrysler 300 Fuse Box Layout
    - Advantages of eBooks Over Traditional Books
2. Identifying 2006 Chrysler 300 Fuse Box Layout
    - Exploring Different Genres
    - Considering Fiction vs. Non-Fiction
    - Determining Your Reading Goals
3. Choosing the Right eBook Platform
    - Popular eBook Platforms
    - Features to Look for in an 2006 Chrysler 300 Fuse Box Layout
    - User-Friendly Interface
4. Exploring eBook Recommendations from 2006 Chrysler 300 Fuse Box Layout
    - Personalized Recommendations
    - 2006 Chrysler 300 Fuse Box Layout User Reviews and Ratings
    - 2006 Chrysler 300 Fuse Box Layout and Bestseller Lists
5. Accessing 2006 Chrysler 300 Fuse Box Layout Free and Paid eBooks
    - 2006 Chrysler 300 Fuse Box Layout Public Domain eBooks
    - 2006 Chrysler 300 Fuse Box Layout eBook Subscription Services
    - 2006 Chrysler 300 Fuse Box Layout Budget-Friendly Options

6. Navigating 2006 Chrysler 300 Fuse Box Layout eBook Formats
    - ePub, PDF, MOBI, and More
    - 2006 Chrysler 300 Fuse Box Layout Compatibility with Devices
    - 2006 Chrysler 300 Fuse Box Layout Enhanced eBook Features
7. Enhancing Your Reading Experience
    - Adjustable Fonts and Text Sizes of 2006 Chrysler 300 Fuse Box Layout
    - Highlighting and Note-Taking 2006 Chrysler 300 Fuse Box Layout
    - Interactive Elements 2006 Chrysler 300 Fuse Box Layout
8. Staying Engaged with 2006 Chrysler 300 Fuse Box Layout
    - Joining Online Reading Communities
    - Participating in Virtual Book Clubs
    - Following Authors and Publishers 2006 Chrysler 300 Fuse Box Layout
9. Balancing eBooks and Physical Books 2006 Chrysler 300 Fuse Box Layout
    - Benefits of a Digital Library
    - Creating a Diverse Reading Collection 2006 Chrysler 300 Fuse Box Layout
10. Overcoming Reading Challenges
    - Dealing with Digital Eye Strain
    - Minimizing Distractions
    - Managing Screen Time
11. Cultivating a Reading Routine 2006 Chrysler 300 Fuse Box Layout
    - Setting Reading Goals 2006 Chrysler 300 Fuse Box Layout
    - Carving Out Dedicated Reading Time
12. Sourcing Reliable Information of 2006 Chrysler 300 Fuse Box Layout
    - Fact-Checking eBook Content of 2006 Chrysler 300 Fuse Box Layout
    - Distinguishing Credible Sources
13. Promoting Lifelong Learning
    - Utilizing eBooks for Skill Development
    - Exploring Educational eBooks
14. Embracing eBook Trends
    - Integration of Multimedia Elements

- Interactive and Gamified eBooks

2006 Chrysler 300 Fuse Box Layout Introduction

Free PDF Books and Manuals for Download: Unlocking Knowledge at Your Fingertips In todays fast-paced digital age, obtaining valuable knowledge has become easier than ever. Thanks to the internet, a vast array of books and manuals are now available for free download in PDF format. Whether you are a student, professional, or simply an avid reader, this treasure trove of downloadable resources offers a wealth of information, conveniently accessible anytime, anywhere. The advent of online libraries and platforms dedicated to sharing knowledge has revolutionized the way we consume information. No longer confined to physical libraries or bookstores, readers can now access an extensive collection of digital books and manuals with just a few clicks. These resources, available in PDF, Microsoft Word, and PowerPoint formats, cater to a wide range of interests, including literature, technology, science, history, and much more. One notable platform where you can explore and download free 2006 Chrysler 300 Fuse Box Layout PDF books and manuals is the internets largest free library. Hosted online, this catalog compiles a vast assortment of documents, making it a veritable goldmine of knowledge. With its easy-to-use website interface and customizable PDF generator, this platform offers a user-friendly experience, allowing individuals to effortlessly navigate and access the information they seek. The availability of free PDF books and manuals on this platform demonstrates its commitment to democratizing education and empowering individuals with the tools needed to succeed in their chosen fields. It allows anyone, regardless of their background or financial limitations, to expand their horizons and gain insights from experts in various disciplines. One of the most significant advantages of downloading PDF books and manuals lies in their portability. Unlike physical copies, digital books can be stored and carried on a single device, such as a tablet or smartphone, saving valuable space and weight. This convenience makes it possible for readers to have their entire library at their fingertips, whether they are commuting, traveling, or simply enjoying a lazy afternoon at home. Additionally, digital files are easily searchable, enabling readers to locate specific information within seconds. With a few keystrokes, users can search for keywords, topics, or phrases, making research and finding relevant information a breeze. This efficiency saves time and effort, streamlining the learning process and allowing individuals to focus on extracting the information they need. Furthermore, the availability of free PDF books and manuals fosters a culture of continuous learning. By removing financial barriers, more people can access educational resources and pursue lifelong learning, contributing to personal growth and professional development. This democratization of knowledge promotes intellectual curiosity and empowers individuals to become lifelong learners, promoting progress and innovation in various fields. It is worth noting that while accessing free 2006 Chrysler 300 Fuse Box Layout PDF books and manuals is convenient and cost-effective, it is vital to respect copyright laws and intellectual property rights. Platforms offering free downloads often operate within legal

boundaries, ensuring that the materials they provide are either in the public domain or authorized for distribution. By adhering to copyright laws, users can enjoy the benefits of free access to knowledge while supporting the authors and publishers who make these resources available. In conclusion, the availability of 2006 Chrysler 300 Fuse Box Layout free PDF books and manuals for download has revolutionized the way we access and consume knowledge. With just a few clicks, individuals can explore a vast collection of resources across different disciplines, all free of charge. This accessibility empowers individuals to become lifelong learners, contributing to personal growth, professional development, and the advancement of society as a whole. So why not unlock a world of knowledge today? Start exploring the vast sea of free PDF books and manuals waiting to be discovered right at your fingertips.

FAQs About 2006 Chrysler 300 Fuse Box Layout Books

1. Where can I buy 2006 Chrysler 300 Fuse Box Layout books? Bookstores: Physical bookstores like Barnes & Noble, Waterstones, and independent local stores. Online Retailers: Amazon, Book Depository, and various online bookstores offer a wide range of books in physical and digital formats.
2. What are the different book formats available? Hardcover: Sturdy and durable, usually more expensive. Paperback: Cheaper, lighter, and more portable than hardcovers. E-books: Digital books available for e-readers like Kindle or software like Apple Books, Kindle, and Google Play Books.
3. How do I choose a 2006 Chrysler 300 Fuse Box Layout book to read? Genres: Consider the genre you enjoy (fiction, non-fiction, mystery, sci-fi, etc.). Recommendations: Ask friends, join book clubs, or explore online reviews and recommendations. Author: If you like a particular author, you might enjoy more of their work.
4. How do I take care of 2006 Chrysler 300 Fuse Box Layout books? Storage: Keep them away from direct sunlight and in a dry environment. Handling: Avoid folding pages, use bookmarks, and handle them with clean hands. Cleaning: Gently dust the covers and pages occasionally.
5. Can I borrow books without buying them? Public Libraries: Local libraries offer a wide range of books for borrowing. Book Swaps: Community book exchanges or online platforms where people exchange books.
6. How can I track my reading progress or manage my book collection? Book Tracking Apps: Goodreads, LibraryThing, and Book Catalogue are popular apps for tracking your reading progress and managing book collections. Spreadsheets: You can create your own spreadsheet to track books read, ratings, and other details.
7. What are 2006 Chrysler 300 Fuse Box Layout audiobooks, and where can I find them? Audiobooks: Audio recordings of

books, perfect for listening while commuting or multitasking. Platforms: Audible, LibriVox, and Google Play Books offer a wide selection of audiobooks.

8. How do I support authors or the book industry? Buy Books: Purchase books from authors or independent bookstores. Reviews: Leave reviews on platforms like Goodreads or Amazon. Promotion: Share your favorite books on social media or recommend them to friends.
9. Are there book clubs or reading communities I can join? Local Clubs: Check for local book clubs in libraries or community centers. Online Communities: Platforms like Goodreads have virtual book clubs and discussion groups.
10. Can I read 2006 Chrysler 300 Fuse Box Layout books for free? Public Domain Books: Many classic books are available for free as theyre in the public domain. Free E-books: Some websites offer free e-books legally, like Project Gutenberg or Open Library.

Find 2006 Chrysler 300 Fuse Box Layout :

craftsman 7 1 4 circular saw manual
crcr study guide
cpt code for synagis 100 mg
crab stuffed chicken recipe
craftsman 16 electric chainsaw manual
cracking the periodic table code
craftsman 625 series manual
~~craftsman gt 5500 owners manual~~
crafts for kids from exodus 31
crave an erotic stepbrother billionaire romance english edition
craftsman 875 series lawn mower manual
cput application form 2015
craftsman 18 convertible trimmer 31cc manual
craftsman gt6000 user manual
crab shrimp bread salad recipe

2006 Chrysler 300 Fuse Box Layout :

sex trip bucarest no limit tome 1 format kindle amazon fr - Nov 25 2021
web après les succès de vicious deal et de dark lovers retrouvez ena fitzbel dans sex trip une série en 4 tomes qui vous fera rougir de plaisir tome 1 bucarest tome 2 san
sex trip hambourg no limit tome 3 amazon de - Nov 06 2022
web hello sign in account lists returns orders shopping basket
sex trip hambourg no limit tome 3 amazon ca - Feb 09 2023
web select the department you want to search in
sex trip hambourg no limit tome 3 french edition - Dec 07 2022
web oct 16 2019 amazon com sex trip hambourg no limit tome 3 french edition 9781700107077 fitzbel ena books
sex trip hambourg no limit tome 3 french edition ebook - Jul 02 2022
web sex trip hambourg no limit tome 3 french edition ebook fitzbel ena amazon ca kindle store
sex trip hambourg no limit tome 3 paperback □□□□ - Oct 05 2022
web oct 16 2019 amazon co jp sex trip hambourg no limit tome 3 fitzbel ena foreign language books
sex trip hambourg no limit tome 3 french edition kindle - Apr 11 2023
web sex trip hambourg no limit tome 3 french edition ebook fitzbel ena amazon co uk kindle store
sex trip hambourg no limit tome 3 by ena fitzbel - Jan 08 2023
web sex trip hambourg le moment est venu pour jef de retrouver aur lie ces derniers mois une amiti solide s est nou e entre eux survivra t elle l ambiance lectrique qui r gne
sex trip hambourg no limit tome 3 robbie aitken - Mar 30 2022
web sex trip hambourg no limit tome 3 sex trip hambourg no limit tome 3 2 downloaded from darelova com on 2023 07 23 by guest the legal status of lesbian gay bisexual
the sex trip rotten tomatoes - Dec 27 2021
web movie info a shallow womanizer refuses a homeless lady s request for a kiss and wakes up the next morning to discover that he s been changed into a woman genre comedy
sex trip hambourg no limit tome 3 paperback amazon - Aug 03 2022
web hello sign in account lists returns orders cart
the sex trip 2016 full cast crew imdb - Oct 25 2021
web the sex trip 2016 cast and crew credits including actors actresses directors writers and more menu movies release calendar top 250 movies most popular movies browse

buy sex trip hambourg no limit tome 3 book online at low - Sep 04 2022
web amazon in buy sex trip hambourg no limit tome 3 book online at best prices in india on amazon in read sex trip hambourg no limit tome 3 book reviews
sex trip hambourg no limit tome 3 french edition kindle - Jul 14 2023
web oct 18 2019 sex trip hambourg no limit tome 3 french edition kindle edition by fitzbel ena download it once and read it on your kindle device pc phones or tablets
sex trip film 2004 allociné - Jan 28 2022
web sex trip est un film réalisé par jeff schaffer et alec berg avec scott mechlowicz jacob pitts synopsis scotty correspond par mail avec une charmante allemande
sex trip ser sex trip hambourg no limit tome 3 by ena - Jun 13 2023
web find many great new used options and get the best deals for sex trip ser sex trip hambourg no limit tome 3 by ena fitzbel 2019 trade paperback at the best
sex trip hambourg by ena fitzbel 9781700107077 dymocks - Jun 01 2022
web sex trip hambourg from dymocks online bookstore no limit tome 3 paperback by ena fitzbel
amazon co uk customer reviews sex trip hambourg no limit - Apr 30 2022
web find helpful customer reviews and review ratings for sex trip hambourg no limit tome 3 french edition at amazon com read honest and unbiased product reviews from our
sex trip hambourg no limit tome 3 amazon co uk fitzbel - Aug 15 2023
web buy sex trip hambourg no limit tome 3 by fitzbel ena from amazon s fiction books store everyday low prices on a huge range of new releases and classic fiction sex trip
sex trip hambourg no limit tome 3 japanalert bananacoding - Feb 26 2022
web gender roles and sex equality sex trip hambourg no limit tome 3 downloaded from japanalert bananacoding com by guest elaine sydnee directory of nursing home
sex trip hambourg no limit tome 3 book depository - May 12 2023
web oct 16 2019 book depository is the world s most international online bookstore offering over 20 million books with free delivery worldwide
9781700107077 sex trip hambourg no limit tome 3 - Mar 10 2023
web abebooks com sex trip hambourg no limit tome 3 french edition 9781700107077 by fitzbel ena and a great selection of similar new used and
cbse class 12 maths question papers 2014 all sets - Apr 22 2022

web sep 9 2016 class 12 mathematics question papers for the year 2014 has been made available with solutions at mycbseguide com cbse annual examination question papers for the exam held in march 2014 for class 12 mathematics are issued by cbse we have added all sets of question papers including 3 sets of delhi 3 sets of outside delhi and 3

pearson south africa pty ltd - Feb 01 2023

web mathematical literacy grade 12 navigation guide 11 mathematical literacy grade 12 term 1 revised dbe annual teaching plan navigation plan themes topic topic unit unit content specific concepts time links to platinum series and pearson navigation pack page reference data handling

grade 12 mathematics platinum navigation pack pdf - Oct 09 2023

web mathematics grade 12 navigation pack print isbn 9781485720379 print guid 27b1d662 bc5f 4dbe 808c c6f2448046c9 epdf isbn 9781485720423 epdf guid b651a12e 2062 41be 852f 0523d6774d9e acknowldgements mypedia assessments maths grade 12 calvin dube ed 2019 reprinted by permission of pearson south

mathematics grade 12 maths free textbooks and teacher - Nov 29 2022

web mar 24 2022 on this page you will find mathematics grade 12 free textbooks teacher guides as well as learner guides for download the books are in pdf format for easy download the books have been supplied by the south african department of education as well as amongst others sasol inzalo and western cape education department

platinum mathematics grade 12 learner s book epdf pearson - Apr 03 2023

web buy platinum mathematics grade 12 learner s book epdf at the pearson estore we believe in all kinds of learning for all kinds of people so they can flourish

mathematics platinum caps grade 12 2014 wp publish - Aug 27 2022

web mathematics platinum caps grade 12 2014 whispering the techniques of language an psychological quest through mathematics platinum caps grade 12 2014 in a digitally driven earth wherever screens reign supreme and instant transmission drowns out the subtleties of language the profound secrets and psychological nuances concealed within

previous year question paper for cbse class 12 maths 2014 - Mar 22 2022

web nov 1 2023 here we ve provided the cbse class 12 maths previous year question paper of 2014 in pdf these papers will give a boost to students preparation and fill them with confidence to face the board exam that s right all in one to make your scoreboard touch the sky last updated date 01st nov 2023

someone s in a makro product details mood - Sep 27 2022

web unbeatable deals secure shopping 100 contactless reliable delivery many ways to pay

mathematics platinum caps grade 12 2014 thebookee net - Oct 29 2022

web you can download pdf versions of the user s guide manuals and ebooks about mathematics platinum caps grade 12 2014

you can also find and download for free a free online manual notices with beginner and intermediate downloads documentation you can download pdf files or doc and ppt about mathematics platinum caps grade 12

pearson south africa pty ltd - Jun 05 2023

web mathematics grade 12 term 1 mathematics grade 12 navigation pack revised dbe annual teaching plan navigation plan topic unit content specific concepts time links toplatinum series and pearson navigation pack page reference euclidean geometry 3 revision grade 11 geometry

grade 12 2014 final papers maths excellence - Sep 08 2023

web grade 12 2014 final papers some of these documents are large please be patient as it takes a while to open you will need acrobat reader to download the documents on this page click here to download acrobat reader maths 2014 gr 12 maths final paper 1 gr 12 maths memo final paper 1 gr 12 maths final paper 2 gr 12 maths memo final

platinum mathematics g12 lb caps ferndale textbooks - Dec 31 2022

web platinum mathematics grade 12 learner s book caps publisher pearson education isbn 9780636143319 r 336 00 qty decrease increase add to cart share facebook twitter

table of 14 learn multiplication table of fourteen vedantu - Feb 18 2022

web nov 3 2023 solution using table of 14 we get 14 times 10 minus 4 plus 6 14 10 4 6 140 2 142 hence 14 times 10 minus 4 plus 6 is 142 question 2 find the value of 14 times 4 minus 7 with the use of the table of 14 solution firstly we are required to write 14 times 4 minus 7 mathematically using 14 times table we have 14 times 4

platinum mathematics g12 9780636143319 caxton books - Mar 02 2023

web platinum mathematics grade 12 superior caps coverage and written by expert authors superior illustrations and activities to improve results and motivate learners superior teacher support to save time and make teaching easy

maths platinum grade 12 2014 usa tgifridays - May 24 2022

web maths platinum grade 12 2014 usa tgifridays com subject maths platinum grade 12 2014 created date 20230317031953pm

maths platinum grade 12 2014 cpanel urbnleaf com - Jul 26 2022

web title maths platinum grade 12 2014 download only cpanel urbnleaf com subject maths platinum grade 12 2014 download only created date 10 8 2023 10 04 25 pm

maths platinum grade 12 2014 pdf - Aug 07 2023

web maths platinum grade 12 2014 reviewing maths platinum grade 12 2014 unlocking the spellbinding force of linguistics in a fast paced world fueled by information and interconnectivity the spellbinding force of linguistics has acquired newfound prominence its capacity to evoke emotions stimulate contemplation and

platinum mathematics grade 12 learner s book epub ebook - May 04 2023
web oct 11 2012 sort title platinum mathematics grade 12 learner s book epub author m bradley j campbell s mcpetrie first name m j s last name bradley campbell mcpetrie imprint maskew miller longman owner pearson education southern africa edition 1 e isbn 9780636158764
grade 12 mathematical literacy platinum navigation pack pdf - Jul 06 2023
web mathematical literacy grade 12 navigation pack print isbn 9781485720393 print guid a4ac3a5b ce68 435c b15a d6620d950ff1 epdf isbn 9781485720478 epdf guid fbac612f d5d2 451a ba01 1f188b85b691 loading grade 12 mathematical literacy platinum navigation pack pdf page 1 of 81
mathematical litracy platinum caps grade 12 2014 2023 - Jun 24 2022
web mathematics grade 4 platinum mathematical literacy the theory of flight study and master accounting grade 12 caps teacher s guide study and master natural sciences and technology grade 6 caps teacher s guide study and master life sciences grade 11 caps study guide mathematical litracy platinum caps grade 12 2014 downloaded
mozart 123 livres babelio - Mar 26 2022
web découvrez sur babelio com livres et les auteurs sur le thème mozart mozart et la pluie un désordre de pétales rouges de christian bobin mozart sociologie d un génie de norbert elias le dernier des mozart de jacques tournier de léopold à constance wolfgang amadeus de maurice barthélemy mozart l itinéraire libertin de eve ruggieri
ma c moires par le librettiste de mozart alpaca awamaki - Sep 12 2023
web ma c moires par le librettiste de mozart downloaded from alpaca awamaki org by guest melissa jose george sand vignaud pamphletsannala uladh 1379 1541 ed by b maccarthygenie civilannales politiques civiles et littéraires du dix huitième siècle observations d un républicain a bruxelles de l imprimerie de l auteur 1790
free ma c moires par le librettiste de mozart - Feb 05 2023
web ma c moires par le librettiste de mozart russia and the low countries dec 29 2022 this bibliography contains everything that has been published in the west except from russia about the relations between the low countries belgium and the netherlands and russia in every western language p 4 of cover
ma c moires par le librettiste de mozart pdf uniport edu - Jan 04 2023
web apr 7 2023 merely said the ma c moires par le librettiste de mozart is universally compatible considering any devices to read l art musical alphonse leduc 1890 bibliothèque universelle et revue suisse 1882 perasma pierre mertens 2013 08 25t00 00 00 02 00 on dirait un nom de plume
ma c moires par le librettiste de mozart full pdf old syndeohro - Jul 10 2023
web ma c moires par le librettiste de mozart 1 ma c moires par le librettiste de mozart the royal dictionary abridged the

charitable arbitrator dictionnaire universel historique critique et bibliographique premier me moire contre le mare chal soult duc de dalmatie ministre de la guerre repre sentant l etat

mémoires par le librettiste de mozart by lorenzo da ponte - May 28 2022

web may 19 2023 mémoires par le librettiste de mozart by lorenzo da ponte mémoires par le librettiste de mozart by lorenzo da ponte full text of annales historiques de la rvolution franaise le live marseille aller dans les plus grandes soires mmoires de la socit acadmique de l arrondissement de figaro journal non politique gallica fr mmoires

leopold mozart wikipédia - Dec 03 2022

web johann georg leopold mozart né le 14 novembre 1719 à augsbourg et mort le 28 mai 1787 à salzbourg est un compositeur professeur de musique et violoniste allemand aujourd hui surtout connu comme père et professeur de wolfgang amadeus mozart il était assez célèbre à son époque pour sa méthode de violon versuch einer

free ma c moires par le librettiste de mozart - Jun 09 2023

web ma c moires par le librettiste de mozart l opera de rameau apr 28 2021 smith college studies in modern languages jan 14 2020 operetta oct 23 2020 operetta developed in the second half of the 19th century from the french opéra comique and the more lighthearted german singspiel as the century progressed the serious concerns of

mozart pte ltd 200305941d singapore company - Feb 22 2022

web jun 26 2003 mozart pte ltd registration no unique entity number 200305941d issued by accounting and corporate regulatory authority mozart pte ltd the company is a private company limited by shares incorporated on 26 june 2003 thursday in singapore the address of the company s registered office is at the myp

ma c moires par le librettiste de mozart margaret mcfadden - Jul 30 2022

web download and install ma c moires par le librettiste de mozart therefore simple a debate on india in the english parliament charles forbes comte de montalembert 1858 la dame blanche françois adrien boieldieu 2013 08 cette uvre fait partie de la serie tredition classics la maison d edition tredition basee a hambourg a publie dans la

ma c moires 1749 1838 par le librettiste de mozar - May 08 2023

web crit le texte des trois opras les plus connus de mozart les noces de figaro don juan et cosi fan tutte il fut la fin du xviiie le meilleur librettiste de vienne sa collaboration tait recherche par tous les compositeurs c est ainsi qu il crivit pour mozart salieri martin y soler et bien d autres encore protg par joseph ii

ma c moires par le librettiste de mozart pdf wrbb neu - Jun 28 2022

web install ma c moires par le librettiste de mozart for that reason simple ma c moires par le librettiste de mozart 2019 12 04 lauren grimes le grand dictionnaire hachette oxford vignaud pamphletsannala uladh 1379 1541 ed by b maccarthygenie civilannales politiques civiles et littéraires du dix huitième siècle observations d un

ma c moires par le librettiste de mozart cyberlab sutd edu sg - Mar 06 2023
web ma c moires par le librettiste de mozart proceedings of the geological society of london sep 22 2020 catalogue or alphabetical index jun 12 2022 a manual of classical bibliography oct 24 2020 yearbook international tribunal for the law of the sea annuaire tribunal international du droit de la mer volume 20 2016 jul 21 2020
mémoires par le librettiste de mozart by lorenzo da ponte - Oct 01 2022
web 1887 part 1 arabella l opra bastille ma critique le huffington post teseo thse opra baroque le magazine de l opra figaro journal non politique gallica la danse 2006 la bibliothque thtre histoire de la littrature hatienne ou l me noire teseo le magazine de l opra baroque fr mmoires par le librettiste de mozart da nouveaux samedis 15e
mémoires par le librettiste de mozart by lorenzo da ponte - Aug 31 2022
web mémoires par le librettiste de mozart by lorenzo da ponte mémoires par le librettiste de mozart by lorenzo da ponte beaumarchais sa vie ses crits et son temps vii le full text of annales historiques de la rvolution franaise berlioz rakoczy jnak eredeti kzirata full text of bibliographie de la france 1887 part 1
ma c moires par le librettiste de mozart pdf uniport edu - Nov 02 2022
web ma c moires par le librettiste de mozart 1 6 downloaded from uniport edu ng on june 28 2023 by guest ma c moires par le librettiste de mozart as recognized adventure as skillfully as experience about lesson amusement as skillfully as contract can be gotten by just checking out a book ma c moires par le librettiste de mozart in addition to
free ma c moires 1749 1838 par le librettiste de mozar - Aug 11 2023
web ma c moires 1749 1838 par le librettiste de mozar l opéra à hambourg 1648 1728 mar 30 2021 mise en lumière du lien entre l essor de la cité hanséatique et l émergence du genre opératique entre le xviie et le xviiie siècles qui se manifeste par la production de 250 oeuvres lyriques écrites par des compositeurs tels que
ma c moires par le librettiste de mozart uniport edu - Apr 26 2022
web jul 11 2023 ma c moires par le librettiste de mozart 3 4 downloaded from uniport edu ng on july 11 2023 by guest polybiblion 1908 the early roman expansion into italy nicola terrenato 2019 05 02 argues that roman expansion in italy was accomplished more by means of negotiation among local elites than through military conquest
ma c moires par le librettiste de mozart pdf - Oct 13 2023
web vies de haydn de mozart et de métastase mar 23 2022 de branche en branche aug 04 2020 mémoires de lorenzo da ponte librettiste de mozart apr 04 2023 la gloire de lorenzo da ponte est d avoir conçu le texte des trois chefs d oeuvre de mozart les noces de figaro don juan cosi fan tutte il a réinventé avec génie pour l opéra
ma c moires par le librettiste de mozart pdf - Apr 07 2023
web ma c moires par le librettiste de mozart bulletin sep 18 2020 constantinople mar 05 2022 bulletin of books in the various

departments of literature and science added to the public library of cincinnati during the year apr 25 2021 annales politiques civiles et littéraires du dix huitième siècle mar 25 2021