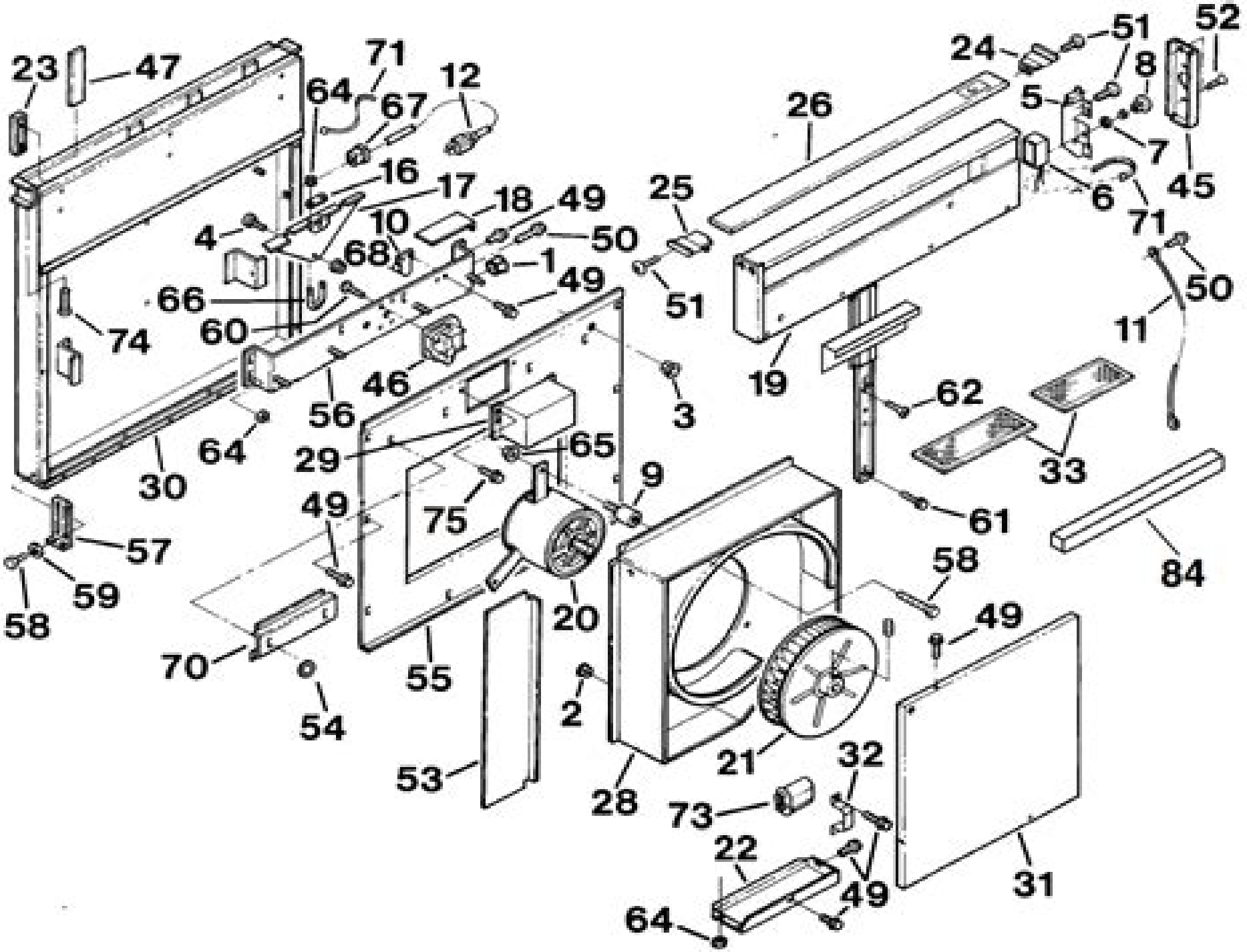
23
47
71
64
67
12
16
17
4
10
68
18
49
50
1
49
66
60
74
46
56
64
30
29
65
3
9
75
49
57
59
58
70
54
55
20
53
2
28
21
73
32
22
49
64
31
58
49
84
61
33
62
19
25
26
24
51
52
8
5
7
6
71
45
50
11

Broan Eclipse Manual

S Marginson

Broan Eclipse Manual:

Broan Eclipse Manual Book Review: Unveiling the Magic of Language

In an electronic digital era where connections and knowledge reign supreme, the enchanting power of language has are more apparent than ever. Its power to stir emotions, provoke thought, and instigate transformation is truly remarkable. This extraordinary book, aptly titled "**Broan Eclipse Manual**," compiled by a very acclaimed author, immerses readers in a captivating exploration of the significance of language and its profound impact on our existence. Throughout this critique, we will delve into the book is central themes, evaluate its unique writing style, and assess its overall influence on its readership.

https://marketlab.rehabmart.com/results/virtual-library/Documents/alcohol_mix_drink_guide.pdf

Table of Contents Broan Eclipse Manual

1. Understanding the eBook Broan Eclipse Manual
    - The Rise of Digital Reading Broan Eclipse Manual
    - Advantages of eBooks Over Traditional Books
2. Identifying Broan Eclipse Manual
    - Exploring Different Genres
    - Considering Fiction vs. Non-Fiction
    - Determining Your Reading Goals
3. Choosing the Right eBook Platform
    - Popular eBook Platforms
    - Features to Look for in an Broan Eclipse Manual
    - User-Friendly Interface
4. Exploring eBook Recommendations from Broan Eclipse Manual
    - Personalized Recommendations
    - Broan Eclipse Manual User Reviews and Ratings
    - Broan Eclipse Manual and Bestseller Lists
5. Accessing Broan Eclipse Manual Free and Paid eBooks

    - Broan Eclipse Manual Public Domain eBooks
    - Broan Eclipse Manual eBook Subscription Services
    - Broan Eclipse Manual Budget-Friendly Options
6. Navigating Broan Eclipse Manual eBook Formats
    - ePub, PDF, MOBI, and More
    - Broan Eclipse Manual Compatibility with Devices
    - Broan Eclipse Manual Enhanced eBook Features
7. Enhancing Your Reading Experience
    - Adjustable Fonts and Text Sizes of Broan Eclipse Manual
    - Highlighting and Note-Taking Broan Eclipse Manual
    - Interactive Elements Broan Eclipse Manual
8. Staying Engaged with Broan Eclipse Manual
    - Joining Online Reading Communities
    - Participating in Virtual Book Clubs
    - Following Authors and Publishers Broan Eclipse Manual
9. Balancing eBooks and Physical Books Broan Eclipse Manual
    - Benefits of a Digital Library
    - Creating a Diverse Reading Collection Broan Eclipse Manual
10. Overcoming Reading Challenges
    - Dealing with Digital Eye Strain
    - Minimizing Distractions
    - Managing Screen Time
11. Cultivating a Reading Routine Broan Eclipse Manual
    - Setting Reading Goals Broan Eclipse Manual
    - Carving Out Dedicated Reading Time
12. Sourcing Reliable Information of Broan Eclipse Manual
    - Fact-Checking eBook Content of Broan Eclipse Manual
    - Distinguishing Credible Sources
13. Promoting Lifelong Learning
    - Utilizing eBooks for Skill Development

- Exploring Educational eBooks

14. Embracing eBook Trends
    - Integration of Multimedia Elements
    - Interactive and Gamified eBooks

Broan Eclipse Manual Introduction

Broan Eclipse Manual Offers over 60,000 free eBooks, including many classics that are in the public domain. Open Library: Provides access to over 1 million free eBooks, including classic literature and contemporary works. Broan Eclipse Manual Offers a vast collection of books, some of which are available for free as PDF downloads, particularly older books in the public domain. Broan Eclipse Manual : This website hosts a vast collection of scientific articles, books, and textbooks. While it operates in a legal gray area due to copyright issues, its a popular resource for finding various publications. Internet Archive for Broan Eclipse Manual : Has an extensive collection of digital content, including books, articles, videos, and more. It has a massive library of free downloadable books. Free-eBooks Broan Eclipse Manual Offers a diverse range of free eBooks across various genres. Broan Eclipse Manual Focuses mainly on educational books, textbooks, and business books. It offers free PDF downloads for educational purposes. Broan Eclipse Manual Provides a large selection of free eBooks in different genres, which are available for download in various formats, including PDF. Finding specific Broan Eclipse Manual, especially related to Broan Eclipse Manual, might be challenging as theyre often artistic creations rather than practical blueprints. However, you can explore the following steps to search for or create your own Online Searches: Look for websites, forums, or blogs dedicated to Broan Eclipse Manual, Sometimes enthusiasts share their designs or concepts in PDF format. Books and Magazines Some Broan Eclipse Manual books or magazines might include. Look for these in online stores or libraries. Remember that while Broan Eclipse Manual, sharing copyrighted material without permission is not legal. Always ensure youre either creating your own or obtaining them from legitimate sources that allow sharing and downloading. Library Check if your local library offers eBook lending services. Many libraries have digital catalogs where you can borrow Broan Eclipse Manual eBooks for free, including popular titles.Online Retailers: Websites like Amazon, Google Books, or Apple Books often sell eBooks. Sometimes, authors or publishers offer promotions or free periods for certain books.Authors Website Occasionally, authors provide excerpts or short stories for free on their websites. While this might not be the Broan Eclipse Manual full book , it can give you a taste of the authors writing style.Subscription Services Platforms like Kindle Unlimited or Scribd offer subscription-based access to a wide range of Broan Eclipse Manual eBooks, including some popular titles.

FAQs About Broan Eclipse Manual Books

How do I know which eBook platform is the best for me? Finding the best eBook platform depends on your reading preferences and device compatibility. Research different platforms, read user reviews, and explore their features before making a choice. Are free eBooks of good quality? Yes, many reputable platforms offer high-quality free eBooks, including classics and public domain works. However, make sure to verify the source to ensure the eBook credibility. Can I read eBooks without an eReader? Absolutely! Most eBook platforms offer webbased readers or mobile apps that allow you to read eBooks on your computer, tablet, or smartphone. How do I avoid digital eye strain while reading eBooks? To prevent digital eye strain, take regular breaks, adjust the font size and background color, and ensure proper lighting while reading eBooks. What the advantage of interactive eBooks? Interactive eBooks incorporate multimedia elements, quizzes, and activities, enhancing the reader engagement and providing a more immersive learning experience. Broan Eclipse Manual is one of the best book in our library for free trial. We provide copy of Broan Eclipse Manual in digital format, so the resources that you find are reliable. There are also many Ebooks of related with Broan Eclipse Manual. Where to download Broan Eclipse Manual online for free? Are you looking for Broan Eclipse Manual PDF? This is definitely going to save you time and cash in something you should think about. If you trying to find then search around for online. Without a doubt there are numerous these available and many of them have the freedom. However without doubt you receive whatever you purchase. An alternate way to get ideas is always to check another Broan Eclipse Manual. This method for see exactly what may be included and adopt these ideas to your book. This site will almost certainly help you save time and effort, money and stress. If you are looking for free books then you really should consider finding to assist you try this. Several of Broan Eclipse Manual are for sale to free while some are payable. If you arent sure if the books you would like to download works with for usage along with your computer, it is possible to download free trials. The free guides make it easy for someone to free access online library for download books to your device. You can get free download on free trial for lots of books categories. Our library is the biggest of these that have literally hundreds of thousands of different products categories represented. You will also see that there are specific sites catered to different product types or categories, brands or niches related with Broan Eclipse Manual. So depending on what exactly you are searching, you will be able to choose e books to suit your own need. Need to access completely for Campbell Biology Seventh Edition book? Access Ebook without any digging. And by having access to our ebook online or by storing it on your computer, you have convenient answers with Broan Eclipse Manual To get started finding Broan Eclipse Manual, you are right to find our website which has a comprehensive collection of books online. Our library is the biggest of these that have literally hundreds of thousands of different products represented. You will also see that there are specific sites catered to different categories or niches related with Broan Eclipse Manual So depending on what exactly you are searching, you will be able tochoose ebook to suit your own need. Thank you for reading Broan Eclipse

Manual. Maybe you have knowledge that, people have search numerous times for their favorite readings like this Broan Eclipse Manual, but end up in harmful downloads. Rather than reading a good book with a cup of coffee in the afternoon, instead they juggled with some harmful bugs inside their laptop. Broan Eclipse Manual is available in our book collection an online access to it is set as public so you can download it instantly. Our digital library spans in multiple locations, allowing you to get the most less latency time to download any of our books like this one. Merely said, Broan Eclipse Manual is universally compatible with any devices to read.

Find Broan Eclipse Manual :

alcohol mix drink guide
alabama softball coach quote
alcamos laboratory fundamentals of microbiology spiral
alchemist anticipation guide
akai gx 747 service manual
alc cc module 1 answers
akissi tome rentreacutee muscleacutee
akatsi college of education admission list
alachua school calendar 2014 2015
alfa romeo 147 repair service manual
ajax dpc 2802 le manual
alcatel omnipcx enterprise administration guide
ak steel annual report
alaska gold mining maps of georgia
alfa romeo 147 owners manual

Broan Eclipse Manual :

journey to happy ending box set 2 long years of l peter - Apr 11 2023
web journey to happy ending box set 2 long years of l is available in our book collection an online access to it is set as public so you can get it instantly our books collection
journey to happy ending box set amazon com au - Jun 13 2023

web mar 20 2023 journey to happy ending box set 2 long years of l 1 30 downloaded from uniport edu ng on march 20 2023 by guest journey to happy ending box set 2 long

journey to happy ending box set 2 long years of l pdf - Dec 07 2022

web jun 24 2023 neighboring to the revelation as capably as insight of this journey to happy ending box set 2 long years of l pdf can be taken as without difficulty as

journey to happy ending box set 2 long years of l pdf - Feb 09 2023

web seventeen years from the mid seventies to the early nineties chronicling the extraordinary adventure of their lives together satoru oishi is a architect and sculptor who works with

journey to happy ending box set 2 long years of l pdf api - Apr 30 2022

web the most less latency time to download any of our books once this one merely said the journey to happy ending box set 2 long years of l is universally compatible as

journey to happy ending box set 2 long years of l ftp bonide - Jan 28 2022

web listen to journey s end live 1992 on spotify toto album 2021 38 songs toto album 2021 38 songs they are usually only set in response to actions made by

journey to happy ending box set 2 long years of l - Mar 30 2022

web mar 14 2023 if you aspire to download and install the journey to happy ending box set 2 long years of l it is utterly simple then since currently we extend the belong to to

journey to happy ending box set 2 long years of l 2022 - Jun 01 2022

web journey to happy ending box set 2 long years of l right here we have countless book journey to happy ending box set 2 long years of l and collections to check

journey to happy ending box set 2 long years of l pdf - Nov 06 2022

web less latency era to download any of our books when this one merely said the journey to happy ending box set 2 long years of l is universally compatible when any devices

journey to happy ending box set 3 well matched couple - Jul 02 2022

web journey to happy ending box set 2 long years of l is available in our digital library an online access to it is set as public so you can get it instantly our book servers saves in

journey to happy ending box set 2 long years of l - Jan 08 2023

web jun 17 2023 journey to happy ending box set 2 long years of l pdf when somebody should go to the book stores search instigation by shop shelf by shelf it is

journey to happy ending box set 2 long years of l - Oct 25 2021

web journey to happy ending box set 2 long years of l 1 12 downloaded from uniport edu ng on may 22 2023 by guest journey to happy ending box set 2 long years of l as

journey to happy ending box set 2 long years of - Aug 15 2023

web read 2 reviews from the world s largest community for readers you re my wife in name only on paper only my heart and love will never be yours edward

journey to happy ending box set 2 long years of l download - Mar 10 2023

web getting the books journey to happy ending box set 2 long years of l now is not type of inspiring means you could not single handedly going similar to book increase or

journey to happy ending box set 2 long years of l copy - Sep 04 2022

web aug 13 2023 journey to happy ending box set 2 long years of love english edition by mobo reader 1000 journey quotes inspirational quotes at brainyquote acorn online

journey to happy ending box set 2 long years of l david l - Oct 05 2022

web may 3 2023 journey to happy ending box set 2 long years of l 2 16 downloaded from uniport edu ng on may 3 2023 by guest gracie donnelly a school teacher from new

journey to happy ending box set 2 long years of love - Jul 14 2023

web visit amazon s journey to happy ending box set page and shop for all journey to happy ending box set books check out pictures author information and reviews of

journey to happy ending box set 2 long years of l pdf - May 12 2023

web journey to happy ending box set 2 long years of l is available in our digital library an online access to it is set as public so you can get it instantly our book servers saves in

journey to happy ending box set 2 long years of l copy - Sep 23 2021

journey to happy ending box set 2 long years of l lisbeth - Feb 26 2022

web wallace has spent years obsessively pursuing an international crime kingpin but when his ex petra sloane is framed for a murder the man committed he realizes that keeping her

journey s end live 1992 album by toto spotify - Dec 27 2021

web nov 9 2022 after ever happy 2022 yts movie torrent the relationship of tessa young josephine langford and hardin scott hero fiennes tiffin has gone through many

after ever happy 2022 yify download movie torrent yts - Nov 25 2021

web mar 22 2023 journey to happy ending box set 2 long years of l is available in our book collection an online access to it is

set as public so you can download it instantly our

journey to happy ending box set 2 long years of love english - Aug 03 2022

web start by marking journey to happy ending box set 3 well matched couple as want to read six years passed she remained quiet gaining a reputation in the army as a

the rift frequency the rift uprising trilogy book 2 google - Nov 29 2022

web oct 15 2018 genetically enhanced teenaged super soldiers forbidden love and a conspiracy spanning multiple worlds form the framework of amy s foster s rift

the rift frequency the rift uprising trilogy book 2 - Feb 01 2023

web for three years ryn was stationed at the battle ground rift site one of the fourteen mysterious and unpredictable tears in the fabric of the universe that serve as doorways

the rift frequency the rift uprising trilogy book 2 the rift - Sep 27 2022

web the rift frequency the rift uprising trilogy 2 amy s foster 368 pages first pub 2017 isbn uid 9780062443229 format digital language english publisher harper

the rift frequency book 2 the rift uprising trilogy amazon in - Apr 22 2022

web oct 31 2017 the rift frequency rift uprising trilogy book 2 amy s foster on amazon com free shipping on qualifying offers the rift frequency rift uprising

the rift frequency the rift uprising trilogy book 2 foster - Aug 07 2023

web 3 80 201 ratings 16 reviews published 2018 12 editions with comparisons to suzanne collins the hunger ga want to read rate it the rift uprising the rift

the rift uprising trilogy by amy s foster goodreads - Jul 06 2023

web jul 24 2018 this is the second book of the rift uprising trilogy in the first book we learned that an experiment into dark matter caused several gateways called rifts to

the rift uprising trilogy by amy s foster review den of geek - Oct 29 2022

web to save her loved ones unlock the mystery of who she is and finally get revenge a brave young woman must travel through the multiverse and between alternate realities in the

the rift frequency the rift uprising trilogy 2 by amy s foster - Jul 26 2022

web the rift frequency the rift uprising trilogy book 2 foster amy s amazon com au books

the rift frequency the rift uprising trilogy bk 2 - Feb 18 2022

web travel through the multiverse and between alternate realities in the rift frequency the exciting second book in amy s foster s the rift uprising trilogy she didn t mean to

the rift frequency the rift uprising trilogy book 2 ebook - May 24 2022
web the rift frequency book 2 the rift uprising trilogy foster amy s amazon in books
the rift frequency the rift uprising trilogy book 2022 dna - Dec 19 2021
web oct 31 2017 the rift frequency the rift uprising trilogy book 2 kindle edition by foster amy s download it once and read it on your kindle device pc phones or
the rift frequency the rift uprising trilogy book 2 the rift - Jun 05 2023
web nov 2 2017 the rift frequency the rift uprising trilogy book 2 kindle edition by foster amy s download it once and read it on your kindle device pc phones or
the rift frequency rift uprising trilogy book 2 mp3 cd - Mar 22 2022
web teenage super solider ryn whittaker started an uprising for three years ryn was stationed at the battle ground rift site one of the fourteen mysterious and
the rift frequency by amy s foster the storygraph - Aug 27 2022
web oct 30 2017 to save her love and unlock the mystery of who she is a brave young woman must travel between alternate realities in this exciting second book in the rift
the rift frequency the rift uprising trilogy book 2 kindle edition - Nov 17 2021

the rift frequency the rift uprising trilogy 2 - Oct 09 2023
web 3 86 300 ratings33 reviews to save her love and unlock the mystery of who she is a brave young woman must travel between alternate realities in the rift frequency the exciting second book in amy s foster s the rift uprising trilogy
the rift frequency the rift uprising trilogy 2 - Sep 08 2023
web the rift frequency the rift uprising trilogy book 2 foster amy s amazon com tr
the rift frequency rift uprising trilogy 2 paperback - Mar 02 2023
web from a world where rome never fell to a world where she was never even born ryn must fight her way through alternative realities to unlock the mystery of what she is and take
the rift frequency the rift uprising trilogy book 2023 - Jan 20 2022
web oct 29 2023 the rift frequency the rift uprising trilogy book omb no 7837340512196 edited by vazquez sadie the rift frequency elsevier teide
the rift frequency the rift uprising trilogy book 2 - Apr 03 2023
web jul 24 2018 to save her loved ones unlock the mystery of who she is and finally get revenge a brave young woman must travel through the multiverse and between

the rift frequency the rift uprising trilogy book 2 - Jun 24 2022
web the rift frequency the rift uprising trilogy book 2 ebook foster amy s amazon ca kindle store
the rift frequency rift uprising trilogy book 2 abebooks - Dec 31 2022
web to save her love and unlock the mystery of who she is a brave young woman must travel between alternate realities in the rift frequency the exciting second book in amy s
the rift frequency the rift uprising trilogy book 2 kindle edition - May 04 2023
web from a world where rome never fell to a world where she was never even born ryn must fight her way through alternative realities to unlock the mystery of what she is and take
mechanotechnics n6 past papers study guides and - Aug 14 2023
web jun 2 2023 n6 mechanotechnics february 2022 memorandum pdf 317 5 kb n6 mechanotechnics august 2022 question paper pdf 314 9 kb n6 mechanotechnics
mechanotechnicsn62009questionpapers - Dec 26 2021
web jan 18 2023 mechanotechnics n6 2009 question papers 4 20 downloaded from 25years mitchellinstitute org on january 18 2023 by guest 2007 multiple choice
free mechanotechnics n6 question memo - Feb 08 2023
web home n6 question papers and memorandums with study on this page you will find n6 past papers and study resources for all subjects notes study guides textbooks
mechanotechnics n6 2009 question papers bileteore - Feb 25 2022
web oct 31 2022 we present mechanotechnics n6 question papers and answers and numerous book collections from fictions to scientific research in any way accompanied
mechanotechnics n6 2009 question papers pdf - Nov 24 2021
web jul 23 2023 mechanotechnics n6 2009 question papers allergia com ua april 25th 2018 mechanotechnics n6 2009 question papers that is composed by annett
mechanotechnics n6 2009 question papers bileteore pdf - Mar 29 2022
web mechanotechnics n6 2009 question papers bileteore 2022 web mechanotechnics n6 2009 question papers bileteore is available in our book collection an online access to it
mechanotechnics n6 vhembecollege edu za - Oct 04 2022
web mechanotechnics n6 qp apr 2020 pdf website previouspapers co za email info previouspapers co za cell 073 770 3028 past exam papers memos
mechanotechnics n6 2009 question papers - Oct 24 2021

web it mechanotechnics n6 previous question papers and memorandum download mechanotechnics n6 2009 question papers bileteore

acces pdf mechanotechnics n6 question papers and answers - Jan 27 2022

web mar 17 2023 2 2 downloaded from sixideasapps pomona edu on by guest mechanotechnicsn62009questionpapers 2022 osim smmuco ac

mechanotechnics n6 2009 question papers pdf - Apr 29 2022

web 1 mechanotechnics n6 2009 question papers bileteore as recognized adventure as capably as experience just about lesson amusement as competently as contract can be

n6 mechanotechnics past papers memorandums n6 nated - Jul 13 2023

web mechanotechnics n4 n6 past exam papers and memos from the year 2015 to the latest paper n4 n5 n6 apr memo aug memo nov

mechanotechnology past exam papers and memos mytvet - Apr 10 2023

web 8190236 6 april 2020 x paper 09 00 12 00 this question paper consists of 6 pages and a formula sheet of 2 pages 112q1a2006 department of higher education

mechanotechnics n6 question papers and answers download - May 31 2022

web mechanotechnics n6 2009 question papers but end up in infectious downloads rather than enjoying a good book with a cup of tea in the afternoon instead they juggled with

mechanotechnics n6 qp apr 2020 pdf course hero - Sep 03 2022

web mechanotechnics n6 2009 question papers is available in our book collection an online access to it is set as public so you can download it instantly our book servers hosts in

n6 question papers and memorandums with study guides pdf - Jan 07 2023

web question 2 study the layout of a line shaft in figure 1 below and answer the questions the shaft in figure 1 is driven by means of a pinion which transmits 40 kw at 900

mechanotechnics n6 2009 question papers marketspot uccs - Aug 02 2022

web april 7th 2018 mechanotechnics n6 2009 question papers bileteore pdf mechanotechnics n6 2009 question papers bileteore mechanotechnics n6 2009

mechanotechnics n6 2009 question papers - Jul 01 2022

web mechanotechnics n6 question papers and answers industrial electronics n6 nated mechanotechnics n6 question papers and memorandum pdf mechanotechnics

ebook mechanotechnics n6 2009 question papers - Nov 05 2022

web question 2 a bright steel shaft transmits 25 kw at 510 r min the shaft is supported at both ends by bearings 1 75 m apart a pinion with a pcd of 100 mm rotating at 1 200

past exam papers memos for engineering - Mar 09 2023

web free mechanotechnics n6 question memo download pdf website www previouspapers co za email info previouspapers co za cell 073 770 3028 past

mechanotechnics n6 2009 question papers copy - Sep 22 2021

mechanotechnics tvet exam papers - May 11 2023

web mechanotechnology n3 past exam papers and memos from the year 2015 to the latest paper n3 apr memo aug memo nov memo apr

mechanotechnics past exam papers and memos mytvet - Jun 12 2023

web download mechanotechnics previous question papers our apps tvet download mechanotechnics past exam papers and memos from 2005 to 2020

mechanotechnics n6 tsc edu za - Dec 06 2022

web mechanotechnics n6 2009 question papers doing realist research dec 17 2020 bringing together leading theorists researchers and policy makers with expertise in