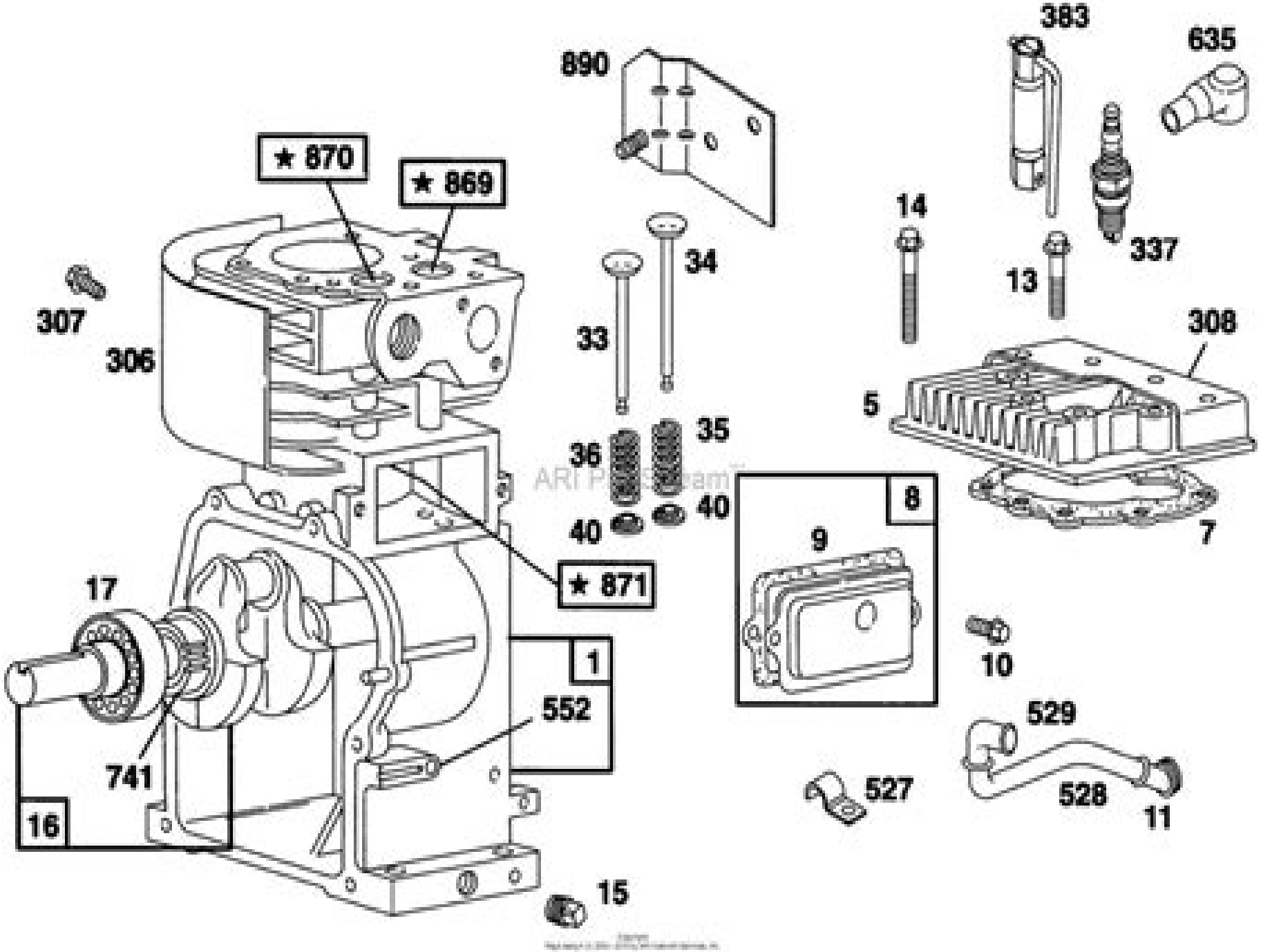
383
635
890
★ 870
★ 869
14
34
337
13
307
33
308
306
5
35
36
40
40
7
8
9
★ 871
17
10
1
552
529
741
527
528
11
16
15

Briggs And Stratton Parts Nottingham

LL Leslie

Briggs And Stratton Parts Nottingham:

Briggs And Stratton Parts Nottingham Book Review: Unveiling the Magic of Language

In an electronic era where connections and knowledge reign supreme, the enchanting power of language has are more apparent than ever. Its ability to stir emotions, provoke thought, and instigate transformation is really remarkable. This extraordinary book, aptly titled "**Briggs And Stratton Parts Nottingham**," published by a very acclaimed author, immerses readers in a captivating exploration of the significance of language and its profound affect our existence. Throughout this critique, we will delve in to the book is central themes, evaluate its unique writing style, and assess its overall influence on its readership.

https://marketlab.rehabmart.com/public/publication/Documents/Cochlear%20Ling%206%20Flash%20Cards.pdf

Table of Contents Briggs And Stratton Parts Nottingham

1. Understanding the eBook Briggs And Stratton Parts Nottingham
    - The Rise of Digital Reading Briggs And Stratton Parts Nottingham
    - Advantages of eBooks Over Traditional Books
2. Identifying Briggs And Stratton Parts Nottingham
    - Exploring Different Genres
    - Considering Fiction vs. Non-Fiction
    - Determining Your Reading Goals
3. Choosing the Right eBook Platform
    - Popular eBook Platforms
    - Features to Look for in an Briggs And Stratton Parts Nottingham
    - User-Friendly Interface
4. Exploring eBook Recommendations from Briggs And Stratton Parts Nottingham
    - Personalized Recommendations
    - Briggs And Stratton Parts Nottingham User Reviews and Ratings
    - Briggs And Stratton Parts Nottingham and Bestseller Lists

5. Accessing Briggs And Stratton Parts Nottingham Free and Paid eBooks
    - Briggs And Stratton Parts Nottingham Public Domain eBooks
    - Briggs And Stratton Parts Nottingham eBook Subscription Services
    - Briggs And Stratton Parts Nottingham Budget-Friendly Options
6. Navigating Briggs And Stratton Parts Nottingham eBook Formats
    - ePub, PDF, MOBI, and More
    - Briggs And Stratton Parts Nottingham Compatibility with Devices
    - Briggs And Stratton Parts Nottingham Enhanced eBook Features
7. Enhancing Your Reading Experience
    - Adjustable Fonts and Text Sizes of Briggs And Stratton Parts Nottingham
    - Highlighting and Note-Taking Briggs And Stratton Parts Nottingham
    - Interactive Elements Briggs And Stratton Parts Nottingham
8. Staying Engaged with Briggs And Stratton Parts Nottingham
    - Joining Online Reading Communities
    - Participating in Virtual Book Clubs
    - Following Authors and Publishers Briggs And Stratton Parts Nottingham
9. Balancing eBooks and Physical Books Briggs And Stratton Parts Nottingham
    - Benefits of a Digital Library
    - Creating a Diverse Reading Collection Briggs And Stratton Parts Nottingham
10. Overcoming Reading Challenges
    - Dealing with Digital Eye Strain
    - Minimizing Distractions
    - Managing Screen Time
11. Cultivating a Reading Routine Briggs And Stratton Parts Nottingham
    - Setting Reading Goals Briggs And Stratton Parts Nottingham
    - Carving Out Dedicated Reading Time
12. Sourcing Reliable Information of Briggs And Stratton Parts Nottingham
    - Fact-Checking eBook Content of Briggs And Stratton Parts Nottingham
    - Distinguishing Credible Sources
13. Promoting Lifelong Learning

- Utilizing eBooks for Skill Development
- Exploring Educational eBooks

14. Embracing eBook Trends
    - Integration of Multimedia Elements
    - Interactive and Gamified eBooks

Briggs And Stratton Parts Nottingham Introduction

In todays digital age, the availability of Briggs And Stratton Parts Nottingham books and manuals for download has revolutionized the way we access information. Gone are the days of physically flipping through pages and carrying heavy textbooks or manuals. With just a few clicks, we can now access a wealth of knowledge from the comfort of our own homes or on the go. This article will explore the advantages of Briggs And Stratton Parts Nottingham books and manuals for download, along with some popular platforms that offer these resources. One of the significant advantages of Briggs And Stratton Parts Nottingham books and manuals for download is the cost-saving aspect. Traditional books and manuals can be costly, especially if you need to purchase several of them for educational or professional purposes. By accessing Briggs And Stratton Parts Nottingham versions, you eliminate the need to spend money on physical copies. This not only saves you money but also reduces the environmental impact associated with book production and transportation. Furthermore, Briggs And Stratton Parts Nottingham books and manuals for download are incredibly convenient. With just a computer or smartphone and an internet connection, you can access a vast library of resources on any subject imaginable. Whether youre a student looking for textbooks, a professional seeking industry-specific manuals, or someone interested in self-improvement, these digital resources provide an efficient and accessible means of acquiring knowledge. Moreover, PDF books and manuals offer a range of benefits compared to other digital formats. PDF files are designed to retain their formatting regardless of the device used to open them. This ensures that the content appears exactly as intended by the author, with no loss of formatting or missing graphics. Additionally, PDF files can be easily annotated, bookmarked, and searched for specific terms, making them highly practical for studying or referencing. When it comes to accessing Briggs And Stratton Parts Nottingham books and manuals, several platforms offer an extensive collection of resources. One such platform is Project Gutenberg, a nonprofit organization that provides over 60,000 free eBooks. These books are primarily in the public domain, meaning they can be freely distributed and downloaded. Project Gutenberg offers a wide range of classic literature, making it an excellent resource for literature enthusiasts. Another popular platform for Briggs And Stratton Parts Nottingham books and manuals is Open Library. Open Library is an initiative of the Internet Archive, a non-profit organization dedicated to digitizing cultural artifacts and making them accessible to the public. Open Library hosts millions of books, including both public domain works

and contemporary titles. It also allows users to borrow digital copies of certain books for a limited period, similar to a library lending system. Additionally, many universities and educational institutions have their own digital libraries that provide free access to PDF books and manuals. These libraries often offer academic texts, research papers, and technical manuals, making them invaluable resources for students and researchers. Some notable examples include MIT OpenCourseWare, which offers free access to course materials from the Massachusetts Institute of Technology, and the Digital Public Library of America, which provides a vast collection of digitized books and historical documents. In conclusion, Briggs And Stratton Parts Nottingham books and manuals for download have transformed the way we access information. They provide a cost-effective and convenient means of acquiring knowledge, offering the ability to access a vast library of resources at our fingertips. With platforms like Project Gutenberg, Open Library, and various digital libraries offered by educational institutions, we have access to an ever-expanding collection of books and manuals. Whether for educational, professional, or personal purposes, these digital resources serve as valuable tools for continuous learning and self-improvement. So why not take advantage of the vast world of Briggs And Stratton Parts Nottingham books and manuals for download and embark on your journey of knowledge?

FAQs About Briggs And Stratton Parts Nottingham Books

How do I know which eBook platform is the best for me? Finding the best eBook platform depends on your reading preferences and device compatibility. Research different platforms, read user reviews, and explore their features before making a choice. Are free eBooks of good quality? Yes, many reputable platforms offer high-quality free eBooks, including classics and public domain works. However, make sure to verify the source to ensure the eBook credibility. Can I read eBooks without an eReader? Absolutely! Most eBook platforms offer webbased readers or mobile apps that allow you to read eBooks on your computer, tablet, or smartphone. How do I avoid digital eye strain while reading eBooks? To prevent digital eye strain, take regular breaks, adjust the font size and background color, and ensure proper lighting while reading eBooks. What the advantage of interactive eBooks? Interactive eBooks incorporate multimedia elements, quizzes, and activities, enhancing the reader engagement and providing a more immersive learning experience. Briggs And Stratton Parts Nottingham is one of the best book in our library for free trial. We provide copy of Briggs And Stratton Parts Nottingham in digital format, so the resources that you find are reliable. There are also many Ebooks of related with Briggs And Stratton Parts Nottingham. Where to download Briggs And Stratton Parts Nottingham online for free? Are you looking for Briggs And Stratton Parts Nottingham PDF? This is definitely going to save you time and cash in something you should think about. If you trying to find then search around for online. Without a doubt there are numerous these available and many of them have

the freedom. However without doubt you receive whatever you purchase. An alternate way to get ideas is always to check another Briggs And Stratton Parts Nottingham. This method for see exactly what may be included and adopt these ideas to your book. This site will almost certainly help you save time and effort, money and stress. If you are looking for free books then you really should consider finding to assist you try this. Several of Briggs And Stratton Parts Nottingham are for sale to free while some are payable. If you arent sure if the books you would like to download works with for usage along with your computer, it is possible to download free trials. The free guides make it easy for someone to free access online library for download books to your device. You can get free download on free trial for lots of books categories. Our library is the biggest of these that have literally hundreds of thousands of different products categories represented. You will also see that there are specific sites catered to different product types or categories, brands or niches related with Briggs And Stratton Parts Nottingham. So depending on what exactly you are searching, you will be able to choose e books to suit your own need. Need to access completely for Campbell Biology Seventh Edition book? Access Ebook without any digging. And by having access to our ebook online or by storing it on your computer, you have convenient answers with Briggs And Stratton Parts Nottingham To get started finding Briggs And Stratton Parts Nottingham, you are right to find our website which has a comprehensive collection of books online. Our library is the biggest of these that have literally hundreds of thousands of different products represented. You will also see that there are specific sites catered to different categories or niches related with Briggs And Stratton Parts Nottingham So depending on what exactly you are searching, you will be able tochoose ebook to suit your own need. Thank you for reading Briggs And Stratton Parts Nottingham. Maybe you have knowledge that, people have search numerous times for their favorite readings like this Briggs And Stratton Parts Nottingham, but end up in harmful downloads. Rather than reading a good book with a cup of coffee in the afternoon, instead they juggled with some harmful bugs inside their laptop. Briggs And Stratton Parts Nottingham is available in our book collection an online access to it is set as public so you can download it instantly. Our digital library spans in multiple locations, allowing you to get the most less latency time to download any of our books like this one. Merely said, Briggs And Stratton Parts Nottingham is universally compatible with any devices to read.

Find Briggs And Stratton Parts Nottingham :

cochlear ling 6 flash cards
cobra 19 plus cb radio manual
coastal bend guides assoc
~~coffeen lake fishing report~~
coats tire changer manual

cockshutt 1600 tractor service repair shop manual instant
code for sustainable homes technical guide
coconut custard impossible pie recipe bisquick
coleman evcon furnace manual user english
cobalt wiring to rap
coastal engineering manual united states army
~~cognitive aptitude test year 9~~
cocoa beach visitors guide
codes of ethics for the helping professions 4853158
~~cobra li 7200 manual~~

Briggs And Stratton Parts Nottingham :

Basic English Grammar, 3rd Edition (Book only) by AZAR Comprehensive, corpus-informed grammar syllabus * The verb-tense system, modals, gerunds, and infinitives. * Nouns, articles, pronouns, and agreement. * ... Basic-English-Grammar-3rd-Ed.pdf - DG Class BASIC. ENGLISH. GRAMMAR. Third Edition. AUDIO. INCLUDED with Answer Key. PEARSON. Longman. Betty Schrampfer Azar. Stacy A. Hagen. Page 4. Basic English Grammar, ... Basic English Grammar, Third... by Betty Schrampfer Azar Basic English Grammar, Third Edition (Full Student Book with Audio CD and Answer Key) is an excellent resource for teaching the basics of English structure and ... Basic English Grammar, Third Edition (Full Student Book ... Basic English Grammar, Third Edition (Full Student Book with Audio CD and Answer Key). by Betty Schrampfer Azar, Stacy A. Hagen. PaperBack. Basic English Grammar, 3rd Edition (Book only) - Softcover Blending communicative and interactive approaches with tried-and-true grammar teaching, Basic English Grammar, Third Edition, by Betty Schrampfer Azar and Stacy ... (PDF) Betty Schrampfer Azar - BASIC ENGLISH GRAMMAR Betty Schrampfer Azar - BASIC ENGLISH GRAMMAR - 3rd edition. by Nadya Dewi. 2006. See Full PDF Download PDF. See Full PDF Download PDF. Loading. Basic English Grammar, 3rd Edition (Book & CD, without ... Minimal grammar terminology for ease of understanding.In-depth grammar practiceImmediate application of grammatical forms and meanings. A variety of exercise ... Basic English Grammar by Stacy A. Hagen and Betty ... Blending communicative and interactive approaches with tried-and-true grammar teaching, "Basic English Grammar, " Third Edition, by Betty Schrampfer Azar and ... Physics 3rd Edition Textbook Solutions Access Physics 3rd Edition solutions now. Our solutions are written by Chegg experts so ... ISBN-13:9780131963924ISBN:0131963929Authors:James S. Walker Rent | Buy. Physics - 3rd Edition - Solutions and Answers Find step-by-step solutions and answers to Physics - 9780131536319, as well ... Physics 3rd Edition by Walker. More

textbook info. Walker. ISBN: 9780131536319. Instructor's Solutions Manual for Physics, Vol. 2, 3rd Edition Instructor's Solutions Manual for Physics, Vol. 2, 3rd Edition [James S. Walker, Kenneth L. Menningen, Michael B. Ottinger, James S. Walker] on Amazon.com. Instructor's solutions manual [to accompany] Physics, third ... Instructor's solutions manual [to accompany] Physics, third edition, James S. Walker. Authors: Kenneth L. Menningen, Michael B. Ottinger, James S. Walker. Instructor's Solutions Manual for Physics, Vol. 2, 3rd Edition ... Instructor's Solutions Manual for Physics, Vol. 2, 3rd Edition by James S. Walker; Kenneth L. Menningen; Michael B. Ottinger - ISBN 10: 013153632X - ISBN ... Physics Solution Manual Author: James S. Walker. 5638 solutions available. See all 4th Editions ... Physics | 3rd Edition. Author: James S. Walker. ISBN13:9780131963924. Textbook ... Instructor's Solutions Manual for Physics, Volume 1, Third ... Instructor's Solutions Manual for Physics, Volume 1, Third Edition by James S. Walker. (Paperback 9780131851108) Physics Instructor's Solutions Manual 2007 Instructor's Solutions Manual to Accompany Walker's Physics Third Edition Volume One (P) by Kenneth L. Menningen, Michael B. Ottinger, & James S. Walker ... Solutions Manual to Accompany Physics for Scientists and ... Solutions Manual to Accompany Physics for Scientists and Engineers, Third Edition by Paul A. Tipler, Volume 2. Front Cover. James S. Walker. Worth Publishers ... Physics, Volume 1, Student Study Guide The print study guide provides the following for each chapter: Objectives Warm-Up Questions from the Just-in-Time Teaching method by Gregor Novak and Andrew ... Elementary Statistics Using Excel - 5th Edition - Quizlet Find step-by-step solutions and answers to Elementary Statistics Using Excel ... Elementary Statistics Using Excel 5th Edition by Mario F. Triola. More ... Student's Solutions Manual for Elementary Statistics Using ... Mario Triola. Student's Solutions Manual for Elementary Statistics Using Excel. 5th Edition. ISBN-13: 978-0321851673, ISBN-10: 0321851676. 3.0 3.0 out of 5 ... Essentials of Statistics 5th Edition Triola Solutions Manual Essentials of Statistics 5th Edition. Triola Solutions Manual. Visit to download the full and correct content document: Student's Solutions Manual for Elementary Statistics Using... Student's Solutions Manual for Elementary Statistics Using Excel 5th edition by Triola, Mario F. (2013) Paperback. 3.0 3.0 out of 5 stars 4 Reviews. Elementary Statistics Using Excel Textbook Solutions Elementary Statistics Using Excel textbook solutions from Chegg, view all supported editions ... Elementary Statistics Using Excel 5th Edition by Mario F. Triola ... Student's Solutions Manual for Elementary Statistics Using ... Student's Solutions Manual for Elementary Statistics Using Excel5th edition ; ISBN-13: 9780321851673 ; Authors: Mario F Triola, Mario Triola ; Full Title: ... Elementary Statistics: Picturing the World - 5th Edition Find step-by-step solutions and answers to Elementary Statistics: Picturing the World - 9780321693624, as well as thousands of textbooks so you can move ... Student's Solutions Manual for Elementary Statistics Using ... Buy Student's Solutions Manual for Elementary Statistics Using Excel 5th edition (9780321851673) by Mario F. Triola for up to 90% off at Textbooks.com. Elementary Statistics Using The Ti-83/84 Plus Calculator ... Textbook solutions for Elementary Statistics Using The Ti-83/84 Plus… 5th Edition Mario F. Triola and others in this series. View step-by-step homework ... Elementary Statistics Using the TI-83/84

Plus Calculator ... Browse Elementary Statistics Using the TI-83/84 Plus Calculator (5th Edition) Textbook Solutions to find verified answers to questions and quizzes.