1. Use Valve Spring Compressor, Tool #19063, (see [1], Figs. 6, 7), adjusting jaws until they just touch the top and bottom of the valve chamber. Push the compressor in until the upper jaw slips over the upper end of the spring, Figs. 6, 7. Apply grease where shown (6). Inset, Fig. 6 – Cup (2), Spring (3), Collar (4), Valve (5).
2. Tighten the jaws to compress the spring.
3. Remove collars (4) or retainers, Fig. 6, pull pins (3) with needle nose pliers (2), Fig. 7, and lift out valve. Pull out compressor and spring.

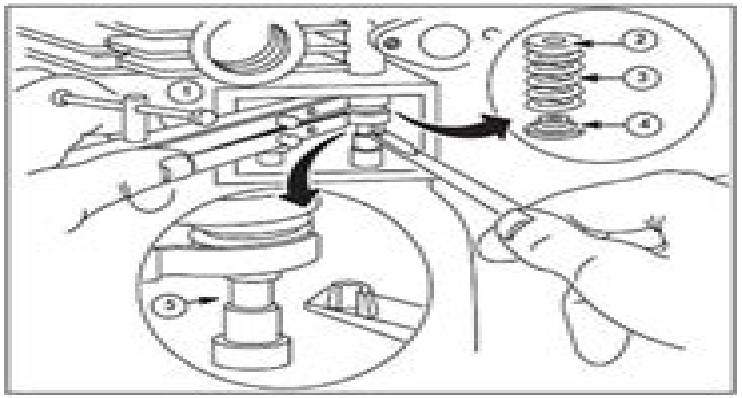

Fig. 6

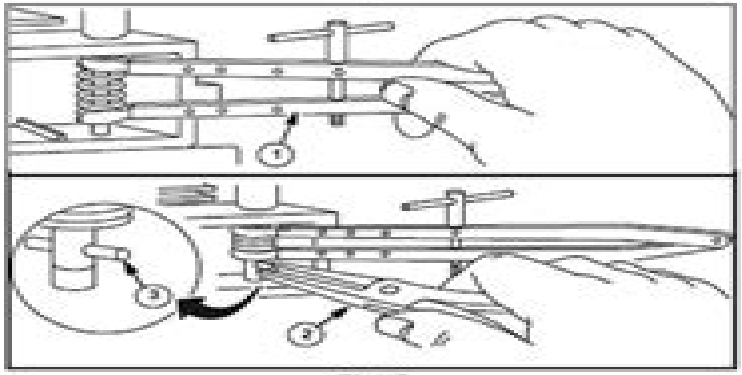

Fig. 7

Reface Valves and Seats

Valve faces can be resurfaced on a commercially available valve grinding tool. Briggs & Stratton does not recommend this practice as a high quality repair procedure. Valve replacement is recommended for damaged or worn valves. Valve seats are cut using Tool #19237 or #19343, Neway Valve Seat Cutter Kit, to 45° on exhaust and some intake seats. Other intake seats are cut to 30°. Valve and seat are lapped in using Tool #19258, Valve Lapping Tool, and Part #94150, Valve Lapping Compound, to assure a good seal between the valve face and the seat.

Valve seat width should be 3/64 to 1/16" (1.17 to 1.57 mm), Fig. 8. If the seat is wider, a narrowing cutter should be used. If valve face or seat are badly burned, the burned part should be replaced. Replace valve if margin (3) is damaged, 1/64" (.40 mm) or less (2). Acceptable wear (1), Fig. 8.

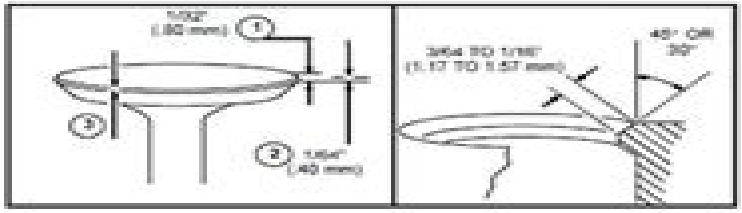

Fig. 8

Briggs And Stratton Model 270962 Repair Manual

CO Houle

Briggs And Stratton Model 270962 Repair Manual:

Embark on a transformative journey with is captivating work, Discover the Magic in **Briggs And Stratton Model 270962 Repair Manual** . This enlightening ebook, available for download in a convenient PDF format Download in PDF: , invites you to explore a world of boundless knowledge. Unleash your intellectual curiosity and discover the power of words as you dive into this riveting creation. Download now and elevate your reading experience to new heights .

https://marketlab.rehabmart.com/results/Resources/Download_PDFS/6248_installation_guide.pdf

Table of Contents Briggs And Stratton Model 270962 Repair Manual

1. Understanding the eBook Briggs And Stratton Model 270962 Repair Manual
    - The Rise of Digital Reading Briggs And Stratton Model 270962 Repair Manual
    - Advantages of eBooks Over Traditional Books
2. Identifying Briggs And Stratton Model 270962 Repair Manual
    - Exploring Different Genres
    - Considering Fiction vs. Non-Fiction
    - Determining Your Reading Goals
3. Choosing the Right eBook Platform
    - Popular eBook Platforms
    - Features to Look for in an Briggs And Stratton Model 270962 Repair Manual
    - User-Friendly Interface
4. Exploring eBook Recommendations from Briggs And Stratton Model 270962 Repair Manual
    - Personalized Recommendations
    - Briggs And Stratton Model 270962 Repair Manual User Reviews and Ratings
    - Briggs And Stratton Model 270962 Repair Manual and Bestseller Lists
5. Accessing Briggs And Stratton Model 270962 Repair Manual Free and Paid eBooks
    - Briggs And Stratton Model 270962 Repair Manual Public Domain eBooks
    - Briggs And Stratton Model 270962 Repair Manual eBook Subscription Services
    - Briggs And Stratton Model 270962 Repair Manual Budget-Friendly Options

6. Navigating Briggs And Stratton Model 270962 Repair Manual eBook Formats
    - ePub, PDF, MOBI, and More
    - Briggs And Stratton Model 270962 Repair Manual Compatibility with Devices
    - Briggs And Stratton Model 270962 Repair Manual Enhanced eBook Features
7. Enhancing Your Reading Experience
    - Adjustable Fonts and Text Sizes of Briggs And Stratton Model 270962 Repair Manual
    - Highlighting and Note-Taking Briggs And Stratton Model 270962 Repair Manual
    - Interactive Elements Briggs And Stratton Model 270962 Repair Manual
8. Staying Engaged with Briggs And Stratton Model 270962 Repair Manual
    - Joining Online Reading Communities
    - Participating in Virtual Book Clubs
    - Following Authors and Publishers Briggs And Stratton Model 270962 Repair Manual
9. Balancing eBooks and Physical Books Briggs And Stratton Model 270962 Repair Manual
    - Benefits of a Digital Library
    - Creating a Diverse Reading Collection Briggs And Stratton Model 270962 Repair Manual
10. Overcoming Reading Challenges
    - Dealing with Digital Eye Strain
    - Minimizing Distractions
    - Managing Screen Time
11. Cultivating a Reading Routine Briggs And Stratton Model 270962 Repair Manual
    - Setting Reading Goals Briggs And Stratton Model 270962 Repair Manual
    - Carving Out Dedicated Reading Time
12. Sourcing Reliable Information of Briggs And Stratton Model 270962 Repair Manual
    - Fact-Checking eBook Content of Briggs And Stratton Model 270962 Repair Manual
    - Distinguishing Credible Sources
13. Promoting Lifelong Learning
    - Utilizing eBooks for Skill Development
    - Exploring Educational eBooks
14. Embracing eBook Trends
    - Integration of Multimedia Elements

- Interactive and Gamified eBooks

Briggs And Stratton Model 270962 Repair Manual Introduction

Briggs And Stratton Model 270962 Repair Manual Offers over 60,000 free eBooks, including many classics that are in the public domain. Open Library: Provides access to over 1 million free eBooks, including classic literature and contemporary works. Briggs And Stratton Model 270962 Repair Manual Offers a vast collection of books, some of which are available for free as PDF downloads, particularly older books in the public domain. Briggs And Stratton Model 270962 Repair Manual : This website hosts a vast collection of scientific articles, books, and textbooks. While it operates in a legal gray area due to copyright issues, its a popular resource for finding various publications. Internet Archive for Briggs And Stratton Model 270962 Repair Manual : Has an extensive collection of digital content, including books, articles, videos, and more. It has a massive library of free downloadable books. Free-eBooks Briggs And Stratton Model 270962 Repair Manual Offers a diverse range of free eBooks across various genres. Briggs And Stratton Model 270962 Repair Manual Focuses mainly on educational books, textbooks, and business books. It offers free PDF downloads for educational purposes. Briggs And Stratton Model 270962 Repair Manual Provides a large selection of free eBooks in different genres, which are available for download in various formats, including PDF. Finding specific Briggs And Stratton Model 270962 Repair Manual, especially related to Briggs And Stratton Model 270962 Repair Manual, might be challenging as theyre often artistic creations rather than practical blueprints. However, you can explore the following steps to search for or create your own Online Searches: Look for websites, forums, or blogs dedicated to Briggs And Stratton Model 270962 Repair Manual, Sometimes enthusiasts share their designs or concepts in PDF format. Books and Magazines Some Briggs And Stratton Model 270962 Repair Manual books or magazines might include. Look for these in online stores or libraries. Remember that while Briggs And Stratton Model 270962 Repair Manual, sharing copyrighted material without permission is not legal. Always ensure youre either creating your own or obtaining them from legitimate sources that allow sharing and downloading. Library Check if your local library offers eBook lending services. Many libraries have digital catalogs where you can borrow Briggs And Stratton Model 270962 Repair Manual eBooks for free, including popular titles.Online Retailers: Websites like Amazon, Google Books, or Apple Books often sell eBooks. Sometimes, authors or publishers offer promotions or free periods for certain books.Authors Website Occasionally, authors provide excerpts or short stories for free on their websites. While this might not be the Briggs And Stratton Model 270962 Repair Manual full book , it can give you a taste of the authors writing style.Subscription Services Platforms like Kindle Unlimited or Scribd offer subscription-based access to a wide range of Briggs And Stratton Model 270962 Repair Manual eBooks, including some popular titles.

FAQs About Briggs And Stratton Model 270962 Repair Manual Books

What is a Briggs And Stratton Model 270962 Repair Manual PDF? A PDF (Portable Document Format) is a file format developed by Adobe that preserves the layout and formatting of a document, regardless of the software, hardware, or operating system used to view or print it. **How do I create a Briggs And Stratton Model 270962 Repair Manual PDF?** There are several ways to create a PDF: Use software like Adobe Acrobat, Microsoft Word, or Google Docs, which often have built-in PDF creation tools. Print to PDF: Many applications and operating systems have a "Print to PDF" option that allows you to save a document as a PDF file instead of printing it on paper. Online converters: There are various online tools that can convert different file types to PDF. **How do I edit a Briggs And Stratton Model 270962 Repair Manual PDF?** Editing a PDF can be done with software like Adobe Acrobat, which allows direct editing of text, images, and other elements within the PDF. Some free tools, like PDFescape or Smallpdf, also offer basic editing capabilities. **How do I convert a Briggs And Stratton Model 270962 Repair Manual PDF to another file format?** There are multiple ways to convert a PDF to another format: Use online converters like Smallpdf, Zamzar, or Adobe Acrobats export feature to convert PDFs to formats like Word, Excel, JPEG, etc. Software like Adobe Acrobat, Microsoft Word, or other PDF editors may have options to export or save PDFs in different formats. **How do I password-protect a Briggs And Stratton Model 270962 Repair Manual PDF?** Most PDF editing software allows you to add password protection. In Adobe Acrobat, for instance, you can go to "File" -> "Properties" -> "Security" to set a password to restrict access or editing capabilities. Are there any free alternatives to Adobe Acrobat for working with PDFs? Yes, there are many free alternatives for working with PDFs, such as: LibreOffice: Offers PDF editing features. PDFsam: Allows splitting, merging, and editing PDFs. Foxit Reader: Provides basic PDF viewing and editing capabilities. How do I compress a PDF file? You can use online tools like Smallpdf, ILovePDF, or desktop software like Adobe Acrobat to compress PDF files without significant quality loss. Compression reduces the file size, making it easier to share and download. Can I fill out forms in a PDF file? Yes, most PDF viewers/editors like Adobe Acrobat, Preview (on Mac), or various online tools allow you to fill out forms in PDF files by selecting text fields and entering information. Are there any restrictions when working with PDFs? Some PDFs might have restrictions set by their creator, such as password protection, editing restrictions, or print restrictions. Breaking these restrictions might require specific software or tools, which may or may not be legal depending on the circumstances and local laws.

Find Briggs And Stratton Model 270962 Repair Manual :

6248 installation guide

6th grade nyc mosl science practice test

68 camaro factory manual
~~6th grade common core standards for alabama~~
6hp johnson boat motor
~~7 1 practice ratios and proportions form g answers~~
66 mustang owners manual
6v53 detroit service manual
6th grade ancient civilization review
60 hp mercury outboard oil change
6th grade eog word list
6th math common core bell ringers
6th grade math ca standards 2013
7 4 human genetics and pedigree
6e0 outboard service manual

Briggs And Stratton Model 270962 Repair Manual :

100 party invitation messages and wording ideas wishesmsg - Aug 15 2023
web apr 13 2023 lunch party invitation message i am inviting you to a delicious lunch party don t miss this exciting opportunity for delicious food and joyous moments hope to see you at my lunch party buddy it ll be a great time to enjoy tasty food and good company some parties create moments of everlasting joy
lunch invitation 151 sweet wordings ideas to share lunch party - Apr 11 2023
web luncheon invitation wording ideas on the greatest occasion on our son name s birthday we invite you and your friends and family to be the parts of a luncheon party at our dear
lunch invitation 151 sweet wordings ideas to share how to - Oct 05 2022
web come on and taste the joy such we invite you to that luncheon day and let s enjoy the feats with all his hearts and minds lets make our friends additional than family as we fill our stomachs with food and hearts with joy at aforementioned luncheon party organized at date place and time
lunch invitation 151 sweet wordings ideas to sharing - Dec 07 2022
web lunch invitation 151 sweet wordings ideas to sharing who doesn t like to spend time with our loved ones the one lovely dinner in a nice restaurant or at some of our relative s homes the an occasion and enjoy so here are of lunch party invitation abfassung ideas worth take your luncheon party a bit more memorable

party invitation wording how to write a party invitation - Jul 14 2023
web may 27 2022 party invitation wording how to write a party invitation written by shutterfly community last updated may 27 2022 whatever your reason for throwing a party you re getting into the mood to celebrate now all that s left is finishing the party planning and sending out the invites

lunch invitation 151 sweet wordings ideas to share - Jun 01 2022
web who doesn t like to squander time with and loved the stylish a lovely dinner in a nice restaurant or at some of our relative s homes as an activity and enjoy formal invitation to lunch invitation books to business partners guide letter example grammar checker 8000 letter samples

lunch invitation 151 sweet wordings ideas to share free - Feb 26 2022
web here are best lunch invitation wordings and messages lunchtime groups are organized go this behalf celebrating certain opportunities with a nice wine with lunch so here were some lunch party invitation wording creative worth making own luncheon party a bit more memorable round of contents luncheon invitation ausarbeitung ideas

how to write a lunch meeting invitation with examples - Mar 30 2022
web sep 30 2022 1 write the subject line the first step to writing a meeting invitation is to write a subject line one strategy for writing a subject line to an email about an event is to include the event and the time in the subject line for example you could write lunch wednesday at 1 p m

free custom printable luncheon invitation templates canva - Jan 08 2023
web luncheon invitation templates take your regular noon time up a notch with a classy luncheon invite guests over with free beautiful invitation templates you can customize and print print from 5 00 skip to end of list all filters skip to start of list other invitation templates skip to end of list holiday invitations christmas

lunch invitation 151 sweet wordings ideas to share - Oct 17 2023
web table of contents luncheon invitation wording ideas on the great occasion of our son name s birthday we invite you and your friends and family to be the part of a luncheon party at our home lets enjoy this day as it is special for our beloved sister name who got her first degree today and hence celebrate with a nice dinner together

182 brunch invitation wording that turn ordinary - Sep 04 2022
web please be on time for the grand lunch a brunch party for you and your family from name is held at event venue on date please come in and enjoy all the delicacies you have never before we are pleased to put forward this brunch party invitation to

8 remarkable luncheon invitation wording ideas - Jul 02 2022
web oct 15 2014 organization cordially invites you to an afternoon luncheon on date at time venue name address

organization invites you to a presentation by name and title at a lunch meeting on date at venue name the presentation and lunch will be held at address we shall be meeting from time to time

lunch invitation 151 sweet wordings ideas to share - Feb 09 2023

web here are best lunchtime invitation wordings and dispatches luncheon parties are organized about these behalf celebrating certain occasions with a nice dinner or lunch there are favorite lunch invitation wordings and messages

lunch invitation 151 sweet wordings ideas to share dinner party - Mar 10 2023

web luncheon parties are organized on all behalf celebrating sure occasions with a nice dinner or lunch here are best lunch invitation wordings also messages

20 invitation messages and wording for lunch knoansw - Jun 13 2023

web feb 13 2023 invitation messages and wording for lunch 1 come and be a part of something special as we invite you to the brunch organized at date time and place and so start your day with a smile 2 come and be a part of this wonderful celebration as we invite you to name and name s post wedding brunch 3

25 lunch invitation messages invitation wording sample 6track - Sep 16 2023

web jul 3 2019 you are invited for a lunch party at cafe hosted by to celebrate the arrival of their beautiful daughter please join us for a bridal luncheon to honor our soon to be bride at 1 00 pm

159 party invitation message examples for all sorts of - Aug 03 2022

web nov 18 2021 what do you write in a party invitation message party invitation message examples ain t no party like a wine party so as we keep in touch forever i have planned a small get together i will be appreciative if you join us for a get together party

lunch invitation 151 sweet wordings ideas to share - May 12 2023

web luncheon invitation wording ideas lunch invitation message funny lunch invitation email to colleagues lunch invitational send for colleagues simple lunch invitation message office lunch invitation wording here is ampere list about lunch letter wording be luncheon parties invitation canva templates

151 sweet lunch invitation wordings and messages to share - Apr 30 2022

web jan 2 2023 how to write a lunch meeting invitation with template and examples january 2 2023 robby i d like to extend an invitation to you and your colleagues to join us for lunch at one of our offices at state address on date time on behalf of insert host name company name

free lunch invitation template download in word google - Nov 06 2022

web free formal lunch invitation template lunch invitation template

gk pal textbook of practical physiology emedicodiary - May 25 2022

web gk pal textbook of practical physiology pdf file size 176 mb google drive link download gk pal textbook of practical physiology pdf drive gk pal textbook out practical physical pdf 176 mb google drive link

textbook of practical physiology 2nd edn g k pal pal - Sep 09 2023

web textbook of practical physiology 2nd edn g k pal pal pravati orient blackswan 2006 human physiology 456 pages the second edition of the book provides even more application

textbook of practical physiology by g k pal open library - Apr 04 2023

web jul 25 2001 edited by open library bot linked existing covers to the edition april 30 2008 created by an anonymous user imported from amazon com record textbook of practical physiology by g k pal p pal july 25

g k pal author of textbook of practical physiology goodreads - Jan 01 2023

web g k pal is the author of textbook of practical physiology 3 44 avg rating 194 ratings 6 reviews published 2001 comprehensive textbook of medical p

textbook of practical physiology g k pal and pravati pal - Aug 08 2023

web this textbook of practical physiology covers all the aspects of the practicals in the subject the authors hope that it will fulfil the needs of the medical student we have tried our best to provide high quality material in a precise and comprehensive form every effort has been made

textbook of practical physiology 5th edn amazon in - Jun 06 2023

web amazon in buy textbook of practical physiology 5th edn book online at best prices in india on amazon in read textbook of practical physiology 5th edn book reviews author details and more at amazon in free delivery on qualified orders

textbook of practical physiology fifth edition g k pal pravati pal - May 05 2023

web sep 1 2020 textbook of practical physiology fifth edition g k pal pravati pal on amazon com free shipping on qualifying offers textbook of practical physiology fifth edition

textbook of practical physiology 4th edn - Oct 30 2022

web amazon in buy textbook of practical physiology 4th edn book online at best prices in india on amazon in read textbook of practical physiology 4th edn book reviews author details and more at amazon in free delivery on

amazon in g k pal books - Aug 28 2022

web sep 15 2020 textbook of practical physiology 5th edn by g k pal and pravati pal 15 september 2020 149 paperback 799 m r p 895 11 off get it monday 23 october tuesday 24 october 50 shipping more buying choices 790 7 new offers comprehensive textbook of medical physiology 2 volumes by g k pal parvati pal

textbook of practical physiology by g k pal goodreads - Jul 07 2023

web read 6 reviews from the world s largest community for readers for almost ten years the textbook of practical physiology

has helped students acquire the k

textbook of practical physiology 5th edition 2020 by gk pal and pravati pal - Sep 28 2022

web textbook of practical physiology 5th edition 2020 by g k pal and pravati pal 9789389211641 0 shop for new arrival 2023 fmge 2023 pgmee books pgmee books pgmee 2023 pgmee 2022 pgmee 2021 pgmee 2020 manual of practical physiology for bds 5th edition 2023 with viva voce questions by ak jain 495 396

pdf physiology practicals researchgate - Jun 25 2022

web pdf on may 1 2016 khaleel alsuwayfee published physiology practicals find read and cite all the research you need on researchgate

textbook of practical physiology g k pal pravati pal google - Oct 10 2023

web orient blackswan 2001 physiology 530 pages the book is a comprehensive textbook for medical students the practicals are explained in simple language the emphasis is on understanding the

textbook of practical physiology fifth edition by g k pal goodreads - Mar 03 2023

web sep 1 2020 write up for the back cover and for over two decades the textbook of practical physiology has been considered the most reliable book on the subject for medical students in india and abroad this fifth edition has been revised to incorporate the latest developments in the fields of applied and clinical physiology and to provide

medical physiology practical - Feb 19 2022

web physiology practical manual 36th batch page 4 introduction aims of the physiology practical course the students are expected to benefit from the practical classes in the following ways 1 learn and acquire skills 2 acquire an aptitude for careful observation 3 familiarize with nomograms 4 gain skill in designing simple

comprehensive textbook of medical physiology 2 volumes - Mar 23 2022

web amazon in buy comprehensive textbook of medical physiology 2 volumes book online at best prices in india on amazon in read comprehensive textbook of medical physiology 2 volumes book reviews author details and more at amazon in free delivery on qualified orders

textbook of practical physiology fifth edition universities press - Feb 02 2023

web dr pravati pal is professor and head of physiology jipmer pondicherry she obtained her mbbs degree from vss medical college orissa and md in physiology from jipmer pondicherry she has expertise in cardiovascular physiology endocrinology yoga and neurophysiology dr pal has had an outstanding academic and research career

textbook of practical physiology by g k pal prithvi books - Apr 23 2022

web textbook of practical physiology by g k pal 895 00 626 00 author g k pal pravati pal edition 5th publisher universities press year 2021 isbn 9789389211641 pages 528 product type paper back condition new add to cart add to wishlist sku

9789389211641 categories 1st year mbbs first year cbme mbbs booklist 2023 description

textbook of practical physiology no cost library - Nov 30 2022

web textbook of practical physiology no cost library textbook of practical physiology 3rd edition author s g k pal parvati pal description the practical physiology textbook has helped students learn the knowledge and skills needed to carry out the investigations that have been an integral part of this topic for nearly ten years

a textbook of practical physiology pdf pdf room - Jul 27 2022

web a textbook of practical physiology free pdf download 406 pages year 2013 physiology read online pdf room

read free undifferentiated marketing strategy of samsung - Sep 02 2022

web marketing marketing through collaboration with customers and two way brand building and illustrates how new thinking has led to innovations in practice the book is full of

undifferentiated marketing strategy definition advantages - Aug 01 2022

web sep 14 2023 1 undifferentiated marketing strategy of samsung the bitter aftertaste of coca cola s neutral marketing strategy forbes jul 12 2023 the bitter aftertaste

undifferentiated marketing strategy of samsung copy - Feb 07 2023

web undifferentiated marketing strategy is a mass marketing strategy where marketing campaigns are designed such that they appeal to a larger pool of customers here a

pdf undifferentiated marketing strategy of samsung - May 10 2023

web mar 13 2014 if samsung is paying that s even more telling they re effectively trying to buy differentiation this too has precedent samsung has used its cash position very

undifferentiated marketing strategy of samsung pdf uniport edu - Apr 28 2022

web offensive marketing successful marketing strategy for high tech firms strategic retail management and brand management brand admiration ebook principles and

undifferentiated marketing strategy of samsung - Dec 25 2021

web undifferentiated marketing strategy of samsung undifferentiated marketing strategy of samsung samsung smart tv marketing strategies slideshare an example of

samsung s generic competitive strategy growth strategies - Jun 11 2023

web mar 15 2023 let s take a deeper dive into the marketing strategy of samsung and other topics like swot analysis the latest marketing campaigns the digital presence of the

samsung marketing strategies promotional strategies of - Dec 05 2022

web english abstract this research paper deals with samsung electronics with its history and the competitive advantage the

economy and the culture in south korea are also

undifferentiated marketing strategy of samsung - May 30 2022

web of this undifferentiated marketing strategy of samsung by online you might not require more mature to spend to go to the book launch as well as search for them in some

undifferentiated marketing strategy of samsung - Jan 26 2022

web mar 12 2019 the undifferentiated marketing strategy focuses on an entire target market rather than a segment of it this strategy employs a single marketing mix one

undifferentiated marketing strategy pros cons - Jan 06 2023

web may 26 2021 undifferentiated marketing uses the same approach to every segment of an audience to sell a brand to to everyone undifferentiated product examples include

undifferentiated marketing definition overview - Apr 09 2023

web sep 21 2023 samsung s generic competitive strategy and intensive growth strategies are observable in product design marketing strategies and the business

undifferentiated marketing strategy of samsung - Nov 04 2022

web samsung uses different approaches and strategies for its promotion so customers attract toward the brand and buy its products therefore the marketing strategy of the

what is the difference between differentiated undifferentiated - Feb 24 2022

web oct 2 2020 differentiation strategies compared to the s8 a professional solid looking exterior square design the best large screen experience with a large 6 3 large

the marketing strategies of sony and samsung report - Jul 12 2023

samsung s e commerce store has an easy to use user interface detailed product categorization and thorough descriptions customers can buy any electronic device see more

detailed marketing strategy of samsung iide - Sep 14 2023

samsung is a pricingexpert they operate in a highly competitive smartphone industry where competitors devise products with see more

samsung s disappearing differentiation by ben thompson - Aug 13 2023

samsung s promotion strategy uses a blend of print and digital advertisements events experiences and content marketing to promote see more

undifferentiated marketing strategy of samsung - Jun 30 2022

web in an undifferentiated marketing strategy a business treats the target market as a homogeneous group one type of

message to every kind of person here a company is

undifferentiated marketing strategy of samsung pdf download - Oct 03 2022

web marketing strategies that samsung should consider in reaction to new undifferentiated marketing strategy normally a domestic company that decides to export part of its

the differentiation strategies from a design standpoint - Mar 28 2022

web may 5 2023 undifferentiated marketing strategy of samsung by online you might not require more grow old to spend to go to the books creation as well as search for them in

an example of undifferentiated marketing small business - Mar 08 2023

web undifferentiated marketing strategy of samsung marketing strategies for the new economy sep 16 2020 two men meet a big bear in the forest one of them sits down to

samsung s marketing strategy how samsung became a pioneer - Oct 15 2023

samsung marketing strategy is to identify developments in the market trends adapt to dynamic changes and produce productsthat the target market demands samsung is a customer centric brand with a diverse product offering in the consumer electronics industry samsung s competitive see more

undifferentiated marketing strategy of samsung - Nov 23 2021

web could enjoy now is undifferentiated marketing strategy of samsung below brand admiration c whan park 2016 09 16 brand admiration uses deep research on