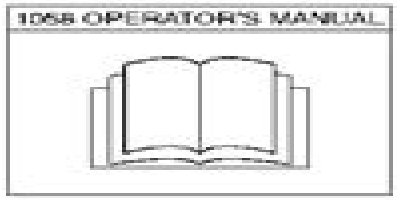
1058 OPERATOR'S MANUAL

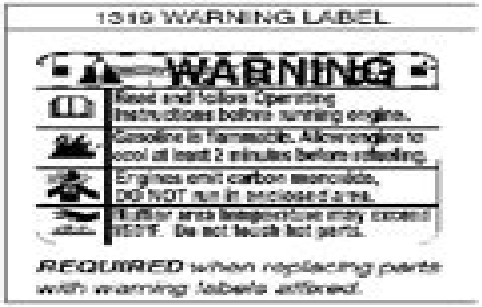
1319 WARNING LABEL
WARNING
Read and follow Operating Instructions before running engine.
Gasoline is flammable. Allow engine to cool at least 2 minutes before refueling.
Engines emit carbon monoxide. DO NOT run in enclosed area.
Muffler area temperature may exceed 150°F. Do not touch hot parts.
REQUIRED when replacing parts with warning labels affixed.

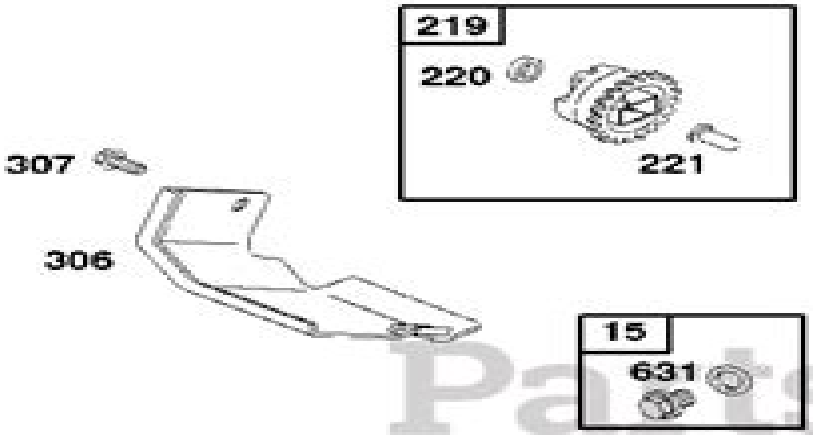
219
220
221
307
306

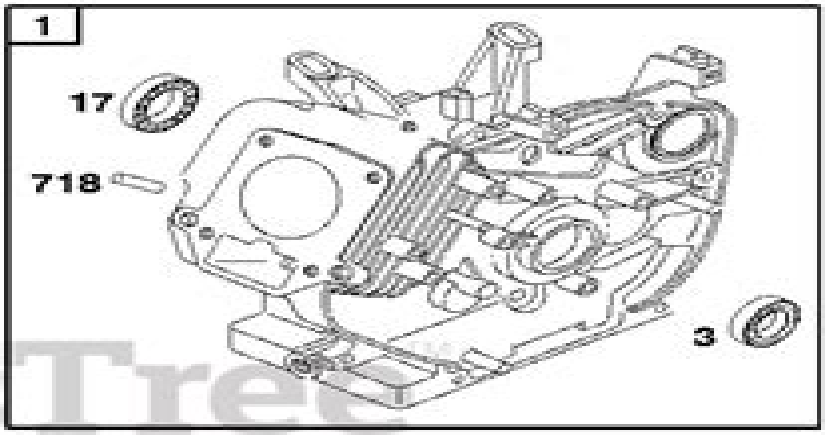
1
17
718
3

15
631

PartsTree

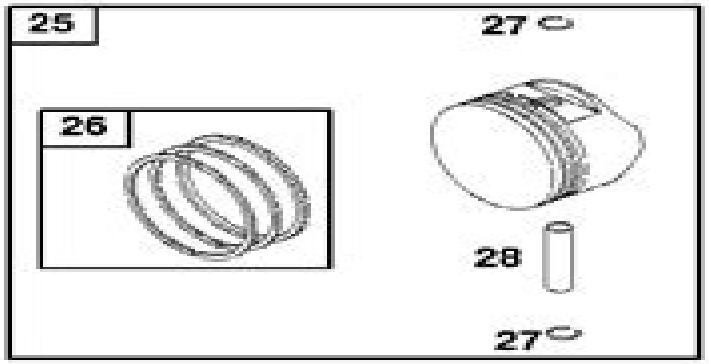
25
27
26
28
27

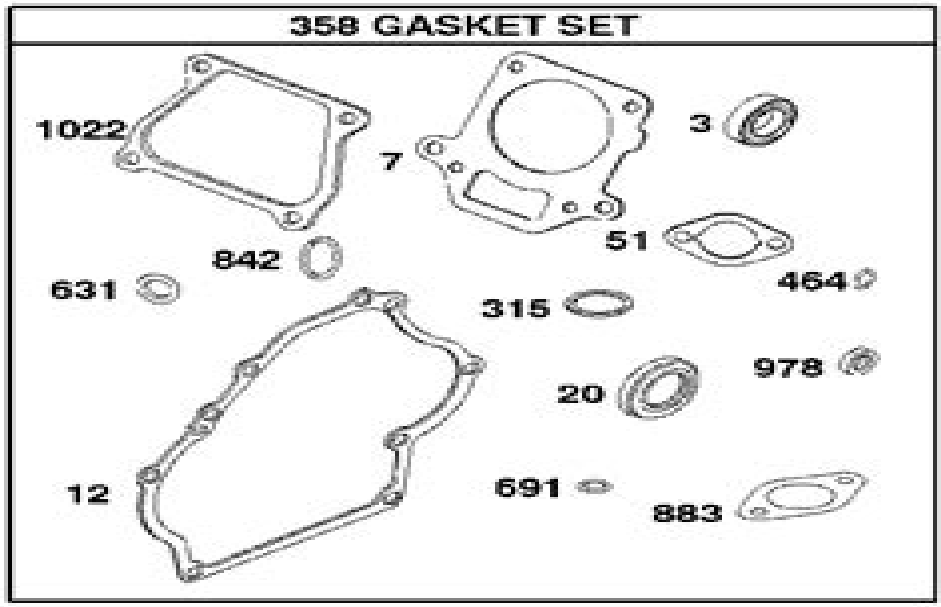
358 GASKET SET
1022
7
3
51
842
631
464
315
978
20
12
691
883

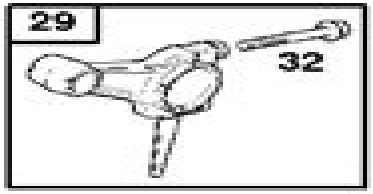
29
32

Briggs And Stratton 117432 Manual

PT Brinkman

Briggs And Stratton 117432 Manual:

Getting the books **Briggs And Stratton 117432 Manual** now is not type of inspiring means. You could not isolated going similar to book gathering or library or borrowing from your connections to open them. This is an utterly easy means to specifically acquire lead by on-line. This online broadcast Briggs And Stratton 117432 Manual can be one of the options to accompany you considering having new time.

It will not waste your time. take me, the e-book will utterly sky you extra matter to read. Just invest tiny grow old to retrieve this on-line pronouncement **Briggs And Stratton 117432 Manual** as with ease as review them wherever you are now.

https://marketlab.rehabmart.com/public/scholarship/default.aspx/Chain%20Reaction%20And%20Nuclear%20Fission%20Worksheet%20Answer%20Key.pdf

Table of Contents Briggs And Stratton 117432 Manual

1. Understanding the eBook Briggs And Stratton 117432 Manual
    - The Rise of Digital Reading Briggs And Stratton 117432 Manual
    - Advantages of eBooks Over Traditional Books
2. Identifying Briggs And Stratton 117432 Manual
    - Exploring Different Genres
    - Considering Fiction vs. Non-Fiction
    - Determining Your Reading Goals
3. Choosing the Right eBook Platform
    - Popular eBook Platforms
    - Features to Look for in an Briggs And Stratton 117432 Manual
    - User-Friendly Interface
4. Exploring eBook Recommendations from Briggs And Stratton 117432 Manual
    - Personalized Recommendations
    - Briggs And Stratton 117432 Manual User Reviews and Ratings
    - Briggs And Stratton 117432 Manual and Bestseller Lists

5. Accessing Briggs And Stratton 117432 Manual Free and Paid eBooks
    - Briggs And Stratton 117432 Manual Public Domain eBooks
    - Briggs And Stratton 117432 Manual eBook Subscription Services
    - Briggs And Stratton 117432 Manual Budget-Friendly Options
6. Navigating Briggs And Stratton 117432 Manual eBook Formats
    - ePub, PDF, MOBI, and More
    - Briggs And Stratton 117432 Manual Compatibility with Devices
    - Briggs And Stratton 117432 Manual Enhanced eBook Features
7. Enhancing Your Reading Experience
    - Adjustable Fonts and Text Sizes of Briggs And Stratton 117432 Manual
    - Highlighting and Note-Taking Briggs And Stratton 117432 Manual
    - Interactive Elements Briggs And Stratton 117432 Manual
8. Staying Engaged with Briggs And Stratton 117432 Manual
    - Joining Online Reading Communities
    - Participating in Virtual Book Clubs
    - Following Authors and Publishers Briggs And Stratton 117432 Manual
9. Balancing eBooks and Physical Books Briggs And Stratton 117432 Manual
    - Benefits of a Digital Library
    - Creating a Diverse Reading Collection Briggs And Stratton 117432 Manual
10. Overcoming Reading Challenges
    - Dealing with Digital Eye Strain
    - Minimizing Distractions
    - Managing Screen Time
11. Cultivating a Reading Routine Briggs And Stratton 117432 Manual
    - Setting Reading Goals Briggs And Stratton 117432 Manual
    - Carving Out Dedicated Reading Time
12. Sourcing Reliable Information of Briggs And Stratton 117432 Manual
    - Fact-Checking eBook Content of Briggs And Stratton 117432 Manual
    - Distinguishing Credible Sources
13. Promoting Lifelong Learning

    - Utilizing eBooks for Skill Development
    - Exploring Educational eBooks
14. Embracing eBook Trends
    - Integration of Multimedia Elements
    - Interactive and Gamified eBooks

Briggs And Stratton 117432 Manual Introduction

In the digital age, access to information has become easier than ever before. The ability to download Briggs And Stratton 117432 Manual has revolutionized the way we consume written content. Whether you are a student looking for course material, an avid reader searching for your next favorite book, or a professional seeking research papers, the option to download Briggs And Stratton 117432 Manual has opened up a world of possibilities. Downloading Briggs And Stratton 117432 Manual provides numerous advantages over physical copies of books and documents. Firstly, it is incredibly convenient. Gone are the days of carrying around heavy textbooks or bulky folders filled with papers. With the click of a button, you can gain immediate access to valuable resources on any device. This convenience allows for efficient studying, researching, and reading on the go. Moreover, the cost-effective nature of downloading Briggs And Stratton 117432 Manual has democratized knowledge. Traditional books and academic journals can be expensive, making it difficult for individuals with limited financial resources to access information. By offering free PDF downloads, publishers and authors are enabling a wider audience to benefit from their work. This inclusivity promotes equal opportunities for learning and personal growth. There are numerous websites and platforms where individuals can download Briggs And Stratton 117432 Manual. These websites range from academic databases offering research papers and journals to online libraries with an expansive collection of books from various genres. Many authors and publishers also upload their work to specific websites, granting readers access to their content without any charge. These platforms not only provide access to existing literature but also serve as an excellent platform for undiscovered authors to share their work with the world. However, it is essential to be cautious while downloading Briggs And Stratton 117432 Manual. Some websites may offer pirated or illegally obtained copies of copyrighted material. Engaging in such activities not only violates copyright laws but also undermines the efforts of authors, publishers, and researchers. To ensure ethical downloading, it is advisable to utilize reputable websites that prioritize the legal distribution of content. When downloading Briggs And Stratton 117432 Manual, users should also consider the potential security risks associated with online platforms. Malicious actors may exploit vulnerabilities in unprotected websites to distribute malware or steal personal information. To protect themselves, individuals should ensure their devices have reliable antivirus software installed and validate the legitimacy of the websites they are downloading from.

In conclusion, the ability to download Briggs And Stratton 117432 Manual has transformed the way we access information. With the convenience, cost-effectiveness, and accessibility it offers, free PDF downloads have become a popular choice for students, researchers, and book lovers worldwide. However, it is crucial to engage in ethical downloading practices and prioritize personal security when utilizing online platforms. By doing so, individuals can make the most of the vast array of free PDF resources available and embark on a journey of continuous learning and intellectual growth.

FAQs About Briggs And Stratton 117432 Manual Books

How do I know which eBook platform is the best for me? Finding the best eBook platform depends on your reading preferences and device compatibility. Research different platforms, read user reviews, and explore their features before making a choice. Are free eBooks of good quality? Yes, many reputable platforms offer high-quality free eBooks, including classics and public domain works. However, make sure to verify the source to ensure the eBook credibility. Can I read eBooks without an eReader? Absolutely! Most eBook platforms offer webbased readers or mobile apps that allow you to read eBooks on your computer, tablet, or smartphone. How do I avoid digital eye strain while reading eBooks? To prevent digital eye strain, take regular breaks, adjust the font size and background color, and ensure proper lighting while reading eBooks. What the advantage of interactive eBooks? Interactive eBooks incorporate multimedia elements, quizzes, and activities, enhancing the reader engagement and providing a more immersive learning experience. Briggs And Stratton 117432 Manual is one of the best book in our library for free trial. We provide copy of Briggs And Stratton 117432 Manual in digital format, so the resources that you find are reliable. There are also many Ebooks of related with Briggs And Stratton 117432 Manual. Where to download Briggs And Stratton 117432 Manual online for free? Are you looking for Briggs And Stratton 117432 Manual PDF? This is definitely going to save you time and cash in something you should think about. If you trying to find then search around for online. Without a doubt there are numerous these available and many of them have the freedom. However without doubt you receive whatever you purchase. An alternate way to get ideas is always to check another Briggs And Stratton 117432 Manual. This method for see exactly what may be included and adopt these ideas to your book. This site will almost certainly help you save time and effort, money and stress. If you are looking for free books then you really should consider finding to assist you try this. Several of Briggs And Stratton 117432 Manual are for sale to free while some are payable. If you arent sure if the books you would like to download works with for usage along with your computer, it is possible to download free trials. The free guides make it easy for someone to free access online library for download books to your device. You can get free download on free trial for lots of books categories. Our library is the biggest of these that have literally hundreds of thousands of different products categories represented. You will also see that there are specific sites

catered to different product types or categories, brands or niches related with Briggs And Stratton 117432 Manual. So depending on what exactly you are searching, you will be able to choose e books to suit your own need. Need to access completely for Campbell Biology Seventh Edition book? Access Ebook without any digging. And by having access to our ebook online or by storing it on your computer, you have convenient answers with Briggs And Stratton 117432 Manual To get started finding Briggs And Stratton 117432 Manual, you are right to find our website which has a comprehensive collection of books online. Our library is the biggest of these that have literally hundreds of thousands of different products represented. You will also see that there are specific sites catered to different categories or niches related with Briggs And Stratton 117432 Manual So depending on what exactly you are searching, you will be able tochoose ebook to suit your own need. Thank you for reading Briggs And Stratton 117432 Manual. Maybe you have knowledge that, people have search numerous times for their favorite readings like this Briggs And Stratton 117432 Manual, but end up in harmful downloads. Rather than reading a good book with a cup of coffee in the afternoon, instead they juggled with some harmful bugs inside their laptop. Briggs And Stratton 117432 Manual is available in our book collection an online access to it is set as public so you can download it instantly. Our digital library spans in multiple locations, allowing you to get the most less latency time to download any of our books like this one. Merely said, Briggs And Stratton 117432 Manual is universally compatible with any devices to read.

Find Briggs And Stratton 117432 Manual :

~~chain reaction and nuclear fission worksheet answer key~~
chapter 10 cell growth and division chapter test a answer key
chapter 11 biology owensboro high school
ch 3conceptual physics packet answers
chapter 1 review biology
ch 5 audit evidence and documentation answers
challenge paper cutter 305 manual
~~chapter 1 ten words in context answer key~~
champion generator instructions
chapter 11 pearson medieval africa answer key
chapter 11 blood study guide
chapter 10 geometry test answers
~~chapter 10 section 3 the senate answer key~~

chamberlain 371lm guide
chapter 11 section 2 the politics of war answer key

Briggs And Stratton 117432 Manual :

tera gear bbq instruction menu 2022 dev clearwatersystems - Apr 23 2022
web 4 tera gear bbq instruction menu 2022 01 19 to wow recipes from every corner of the globe welcome to planet barbecue the book that will take america s passionate obsessive smoke crazed live fire cooks to the next level planet barbecue with full color photographs throughout is an unprecedented marriage of food and culture here for
tera gear bbq instruction menu 2022 duckhunter chevignon com - Aug 28 2022
web tera gear bbq instruction menu downloaded from duckhunter chevignon com co by guest porter cowan robot building for beginners legare street press specifically designed as an introduction to the exciting world of engineering engineering fundamentals an introduction to engineering encourages students to become engineers
tera gear gsf2818a manual pdf download manualslib - Sep 09 2023
web view and download tera gear gsf2818a manual online ter 75k btu 4 1 1 pro gas grill gsf2818a grill pdf manual download
tera gear bbq instruction menu pdf solutions milnerbrowne - Jul 07 2023
web tera gear bbq instruction menu downloaded from solutions milnerbrowne com by guest evan reina zen and the art of motorcycle maintenance taylor francis this book is the first comprehensive monograph dedicated to chakali a southwestern grusi language spoken by less than 3500 people in northwest ghana the dictionary offers a consistent
manuals teragear bbq instructions - Aug 08 2023
web manuals teragear bbq instructions manuals select and click to download a pdf for your barbecue use care assembly manual 13 03 3007tg propane bbq 13 03 3008tg natural gas bbq portable document format pdf documents can be read with adobe reader software
tera gear bbq instruction menu secure4 khronos - May 05 2023
web may 23 2023 tera gear bbq instruction menu gss3220a tera gear bbq parts and bbq accessories tera v burger 57 photos amp 124 reviews vegetarian tera gear grill barbecue parts reliable parts gsf2616ac tera gear bbq parts and bbq accessories terra gear barbecue manual daily books putting together a tera gear duke 25
tera gear grill manuals all guides - Oct 10 2023
web tera gear grill gsf2616ac tera gear grill assembly instructions operations manual 18 pages download manuals user guides for 17 devices offered by tera gear in grill devices category choose one of the enlisted appliances to see
tera gear grill parts free shipping on parts - Feb 19 2022

web replacement bbq parts for tera gear outdoor gas grills burners ignition components cooking grids lava rock we have it all get free shipping to the usa on orders 49 and over

tera gear bbq instruction menu pdf retailer bonide - Jul 27 2022

web tera gear bbq instruction menu 1 tera gear bbq instruction menu conversational latin for oral proficiency robot building for beginners third edition the art journal the future is an ancient lake robot building for beginners electrical installation work intermediate robot building evidence based podiatry the long run barbecue bible bats

tera gear gas grill replacement parts thebbqdepot - Oct 30 2022

web 16 11 16 x 1 stainless burner tera gear 41 37 71 15 7 8 x 39 1 2 bbq tek and tera gear cast iron cooking grates 63064 124 95 112 46 shop grill replacement parts the bbq depot has burners cooking grids grates igniters knobs covers and more get free shipping over 99

tera gear bbq instruction menu secure4 khronos - Jan 01 2023

web jun 26 2023 the tera gear bbq instruction menu it is totally basic then at present we extend the associate to buy and create bargains to retrieve and install tera gear bbq instruction menu therefore easy

tera gear bbq instruction menu secure4 khronos - Nov 30 2022

web jun 17 2023 you could speedily fetch this tera gear bbq instruction menu after securing special you could buy tutorial tera gear bbq instruction menu or get it as soon as viable

tera gear bbq instruction menu pdf uniport edu - Sep 28 2022

web mar 15 2023 tera gear bbq instruction menu 1 9 downloaded from uniport edu ng on march 15 2023 by guest tera gear bbq instruction menu as recognized adventure as with ease as experience nearly lesson amusement as well as arrangement can be gotten by just checking out a books tera gear bbq instruction menu

welcome teragear bbq instructions - Apr 04 2023

web welcome to bbqinstructions com this site is setup to provide assistance to you for assembling your new teragear barbecue as well as offer cooking tips and cautions when using your barbecue

tera gear pc22b manual pdf download manualslib - Jun 06 2023

web view and download tera gear pc22b manual online ter 23in classic charcoal grill pc22b grill pdf manual download

tera gear grill parts see all 32 models appliance factory parts - Feb 02 2023

web select your model from 32 tera gear bbqs and gas grills parts lists diagrams owners manuals and photos available to help find your replacement parts 1 500 google reviews search view cart all brands blog account menu bbqs gas grills humidifiers air conditioners all 32 appliances contact secure

tera gear bbq instruction menu implantes odontocompany com - May 25 2022

web tera gear bbq instruction menu 3 3 include myth bring meat to room temperature before cooking busted cold meat attracts smoke better myth soak wood before using it busted soaking produces smoke that doesn t taste as good as dry fast burning wood myth bone in steaks taste better busted the calcium walls of bone have no

tera gear bbq instruction menu haysomattorneys com - Mar 23 2022

web 4 tera gear bbq instruction menu 2021 05 18 by scholars as being culturally important and is part of the knowledge base of civilization as we know it this work is in the public domain in the united states of america and possibly other nations within the united states you may freely copy and distribute this work as no entity individual or

tera gear bbq instruction menu copy video paydayhcm - Jun 25 2022

web tera gear bbq instruction menu how to light a propane gas grill putting together a tera gear duke 25 000 btu gas pro 2 burner gril bbq meco s americana walk a bout how to set up fold beginners guide to using a charcoal grill the best japanese knives for your kitchen gear heads master chef portable 14 charcoal

tera gear grill parts select from 32 models appliance - Mar 03 2023

web menu bbqs gas grills humidifiers air conditioners all 32 appliances contact secure site home bbqs and gas grills tera gear tera gear bbq and gas grill parts it couldn t be easier select your model and see a list of popular tera gear models click your model to find parts owner s manuals diagrams and more

télécharger pdf la clé des 150 psaumes de david dom - Feb 26 2022

web la clef des 150 psaumes de david paix et joie subscribe to my blog return to the blog of charisma1963

la clé des 150 psaumes de david de dom bernardin - Jul 14 2023

web résumé la clé des 150 psaumes de david est un petit ouvrage compact mais indispensable à qui souhaite se servir efficacement des fameux 150 psaumes de david

les psaumes signification initiation hozana - Mar 30 2022

web découvrez toutes la magie secrets et vertus des 150 psaumes de david et comment les utiliser pour faire des choses merveilleuses chaque psaume est une prière magique et

la clé des 150 psaumes de david broché fnac suisse - Dec 07 2022

web la clé des 150 psaumes de david indique pour chaque psaume les grâces que l on peut obtenir en les récitant un classique essentiel de la magie blanche

la clé des 150 psaumes de david broché dom bernardin fnac - Jun 13 2023

web jan 1 1997 3 50 2 ratings0 reviews cette clef est indispensable à tous ceux qui veulent se servir des 150 psaumes de david la clef indique en effet quels sont les psaumes

la clé des 150 psaumes de david dom bernardin librairie - Aug 03 2022

web la priere attire sur letre la misricorde et lappui bienfaisant des puissances de linvisible dans ce livre sont dvoils tous les secrets des psaumes de david sur

la clé des 150 psaumes de david bernardin dom amazon fr - Aug 15 2023

web cette clef est indispensable à tous ceux qui veulent se servir des 150 psaumes de david la clef indique en effet quels sont les psaumes qu il y a lieu de réciter selon ce qu on

la clef des 150 psaumes de david google docs google sheets - Jul 02 2022

web jan 1 2007 la cle des 150 psaumes de david french edition dom bernardin 9780320039775 amazon com books books

clÉ des 150 psaumes de david la amazon ca - Mar 10 2023

web buy la clé des 150 psaumes de david by bernardin dom isbn 9782850907265 from amazon s book store everyday low prices and free delivery on eligible orders

la clef des 150 psaumes de david paix et joie - Dec 27 2021

web noté 5 retrouvez la clé des 150 psaumes de david et des millions de livres en stock sur amazon fr achetez neuf ou d occasion

la clé des 150 psaumes de david dom bernardin payot - Nov 06 2022

web encore indécis découvrez les avis des clients fnac sur la clé des 150 psaumes de david dom bernardin

3 avis sur la clé des 150 psaumes de david dom bernardin - Sep 04 2022

web noté 3 5 5 retrouvez la clé des 150 psaumes de david et des millions de livres en stock sur amazon fr achetez neuf ou d occasion découvrez tous les livres d incantations

la clef des 150 psaumes de david by dom bernardin open - Apr 11 2023

web clÉ des 150 psaumes de david la paperback feb 16 2014 french edition by dom bernardin author 4 3 223 ratings see all formats and editions paperback

la clé des 150 psaumes de david paperback 11 feb 2019 - Feb 09 2023

web la clé des 150 psaumes de david indique pour chaque psaume les grâces que l on peut obtenir en les récitant un classique essentiel de la magie blanche

clÉ des 150 psaumes de david la paperback feb 11 - Jan 08 2023

web ces psaumes constituent l un des plus anciens et puissants livres de prières existant et sa clef guide le croyant en lui indiquant ce qu il convient de prier selon les circonstances et

cle des psaumes de david pdf prière dieu scribd - Jun 01 2022

web cette classification des psaumes a été en partie reprise dans l ouvrage concordance de la bible les psaumes de desclée de brouwer quels psaumes pour quelles situations

la cle des 150 psaumes de david french edition amazon com - Apr 30 2022
web oct 3 2007 de dom bernardin télécharger cette clef est indispensable à tous ceux qui veulent se servir des 150 psaumes de david la clef indique en effet quels sont les
la cle des 150 psaumes de david goodreads - Oct 05 2022
web la clé des 150 psaumes de david est un petit ouvrage compact mais indispensable à qui souhaite se servir efficacement des fameux 150 psaumes de david ces psaumes
la cle des 150 psaumes de david goodreads - May 12 2023
web feb 12 1997 availability 1 la clef des 150 psaumes de david february 12 1997 bussière paperback in french 2850901555 9782850901553 aaaa not in library
la clé des 150 psaumes de david bernardin dom amazon fr - Oct 25 2021

les 150 psaumes de david vertus secrets pouvoirs et magie - Jan 28 2022
web oct 1 2007 résumé cette clef est indispensable à tous ceux qui veulent se servir des 150 psaumes de david la clef indique en effet quels sont les psaumes qu il y a lieu
la clef des 150 psaumes de david dom bernardin decitre - Nov 25 2021

yaourts beurre et crème les casiers fermiers - May 05 2022
web fromage frais caillé faisselle a déguster en dessert avec du miel ou bien à utiliser pour vos recettes salées ingrédients lait cru entier de chèvre ferments poids net 400g
la meilleure yaourtière fromagère 2023 maisonae - Dec 12 2022
web jan 20 2023 la yaourtière fromagère capable de fabriquer du yaourt du fromage frais de la faisselle et différents desserts lactés de manière générale la présentation et la description du produit énoncent déjà quels types de
yaourts et fromages frais marque repère e leclerc - Jul 19 2023
web 30 par page yaourts et fromages frais marque repère achat en ligne au meilleur prix sur e leclerc retrait gratuit dans de 700 magasins
vente directe de fromages frais et yaourts en ligne pourdebon - Apr 04 2022
web vente directe en ligne de fromages frais et yaourts en ligne issus des meilleurs éleveurs fromagers ou artisans affineurs de france faites vous livrer à domicile partout en france le jour de votre choix la fromagerie marie anne cantin paris 4 9 5 sur 1234 avis voir les 223 produits ajouter au panier fromage blanc lissé maigre 500 gr
une nouvelle gamme de yaourts chez votre fromager grand frais - Jun 18 2023

web découvrez nos délicieux yaourts val de praz ils sont fabriqués en savoie nature ou sur lit de fruits ces yaourts au bon lait de savoie vous séduiront par leur onctuosité et leur généreuse couche de fruits rendez vous vite chez le fromager des halles

yaourtière fromagère quels fromages possibles - Mar 15 2023

web jul 23 2014 dans une yaourtière fromagère il est donc possible de fabriquer des fromages frais fromages maigres à pâte grasse double et triple crème les petits suisses la faisselle ou le des laits fermentés yaourts évidemment caillebottes leben dahdi gioddu mazun et kéfir ou encore lait au

fromage frais maison la petite cuisine de nat - May 17 2023

web cuisine française portions 1 portion ingrédients 2 yaourts nature ou fromage blanc huile d olive sel poivre 6 olives noires instructions déposez un torchon propre dans une passoire et versez y les yaourts ou le fromage blanc déposez la passoire dans un saladier et laissez égoutter toute la nuit au frais

fabrication des yaourts et fromages frais - Sep 09 2022

web fromage frais battu ensemencer et laisser fermenter puis brasser dans la cuve 3h 42 conditionner et mettre au froid À 4 c laisser fermenter en Étuve yaourts fermes 3h 42 rÉfrigÉrer 4 fromage frais en faisselle conditionner et mettre au froid traire refrigÉrer analyser analyser analyser collecter stocker À la laiterie ÉcrÉmer

mon livre de recettes de yaourts faits maison et de fromages frais - Oct 10 2022

web may 24 2023 0 ratings0 reviews découvrez mon livre de recettes de yaourts faits maison et de fromages frais avec ses recettes simples et rapides à réaliser vous pourrez dire à vos amis c est moi qui les ai fait et même leur expliquer comment ça fonctionne

comment faire son propre fromage avec sa yaourtière marmiton - Apr 16 2023

web oct 25 2018 ingrédients pour 4 fromages frais 1 litre de lait de vache ou de chèvre selon vos préférences 2 petits suisses 4 gouttes de présure que vous pouvez trouver en pharmacie préparation tout d abord mélangez délicatement tous les ingrédients

fromagerie maurice pourdebon - Jan 01 2022

web fromages frais et yaourts 17 plateaux de fromages 4 fromages 4 oeufs 2 epicerie sucrée 14 crèmes mousses et compotes 12 sucres farines et levures 2 charcuterie 3 pâtés rillettes terrines et mousses 2 saucissons et autres

yaourts et fromages frais bio village e leclerc - Nov 30 2021

web yaourts et fromages frais bio village achat en ligne au meilleur prix sur e leclerc retrait gratuit dans de 700 magasins

on a testé la fromagère yaourtière lagrange et on a adoré son - Feb 14 2023

web jun 10 2021 la yaourtière fromagère lagrange se présente d abord comme un outil classique permettant de réaliser fromages frais fromages blancs et yaourts en tous genre nous l avons testée sur une longue durée avec différentes recettes et

pour une utilisation intensive et familiale les yaourts sont fermes et crémeux et le fromage

les fromages frais et spécialités yaourt ekia - Jul 07 2022

web nous fabriquons des gammes de yaourts fromages frais et desserts pâtissiers artisanaux élaborés à partir de bon lait de vache de brebis et de chèvre pour fabriquer nos fromages blancs caillés de brebis et faisselles nous utilisons chaque jour du lait entier produit par nos éleveurs depuis leurs exploitations agricoles locales à

faire son fromage frais maison avec 1 seul ingrédient c - Jun 06 2022

web jul 12 2023 ingrédients 1 kg ou moins de yaourt nature ou yaourt grec normal mais pas de 0 une bonne pincée de gros sel facultatif matériel un saladier une passoire coton à fromage ou étamine préparation dans le pot de votre yaourt déposez une pincée de sel et mélangez

fromage frais liste crémeux pour les desserts journal des - Sep 21 2023

web mar 1 2023 au royaume des fromages le fromage frais est le seul qui n est pas affiné et qui peut être consommé directement après sa fabrication grâce à sa texture onctueuse il peut être facilement aromatisé à l aide d herbes fraîches d huile d olive d épices ou

10 recettes faciles de fromages frais et yaourts femme actuelle - Oct 22 2023

web aug 29 2021 fromages frais maison yaourts lassis il y en a pour tous les goûts découvrez nos recettes de desserts lactés 10 recettes faciles de fromages frais et yaourts femme actuelle le mag

réussir ses fromages À la maison frais ou affinés yaourts - Jan 13 2023

web skip to content our stores sign in store locator create an account

malo yaourt fromage frais dessert lait et crème - Aug 20 2023

web découvrez tous les produits malo malo le bonheur est dans le pot découvrez toutes nos saveurs yaourt fromage frais emprésuré dessert gourmand crème fraîche bio

fromages beurres crèmes fraîches pour professionnels - Mar 03 2022

web la marque les 300 laitiers bio élabore les meilleures recettes et propose des yaourts des fromages blancs des crèmes desserts et du soignon propose aux professionnels de la restauration une large gamme de fromage de chèvre en frais ou en iqf adaptée à tous les goûts et à toutes les recettes source nielsen total marché

yogurt versus fromage frais are they similar live gusto - Aug 08 2022

web yogurt vs fromage frais difference in taste texture yogurt is sour in taste and quite creamy it has a thick consistency fromage frais in its original form is slightly tangy and creamy consistency wise it is similar to cream cheese smooth and spreadable how much of yogurt vs fromage frais can be consumed in a day

recette fromage maison à la yaourtière yaourtmaison fr - Nov 11 2022

web voici une recette simple qui vous fera certainement aimer le fromage maison ingrédients pour un bac de fromage blanc vous aurez besoin de 1 litre de lait entier 100 g de fromage blanc choisissez le bien frais 1 cuillerée à soupe de jus de citron préparation commencez par mélanger le lait entier et le fromage blanc

yaourts et fromages blancs bio yaourts et fromages blancs - Feb 02 2022

web faites vos courses en ligne dans le rayon yaourts et fromages blancs et ses produits yaourts et fromages blancs bio sur coursesu com