AUTODESK

INVENTOR

ALL IN ONE WORKBOOK

500+ PRACTICE EXERCISES

- Sketching
- 3D Modeling
- Assembly

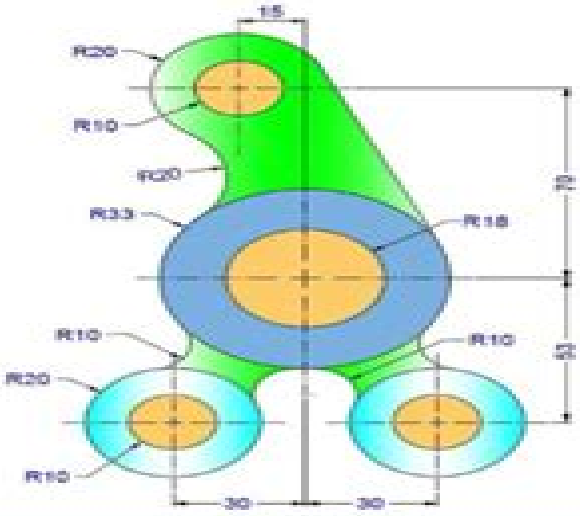

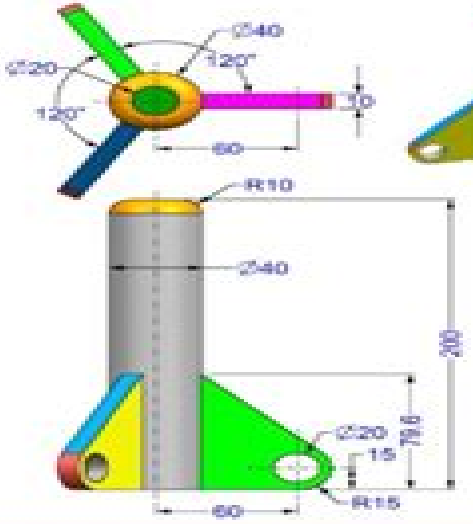

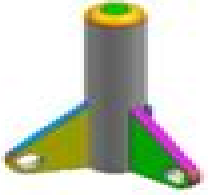

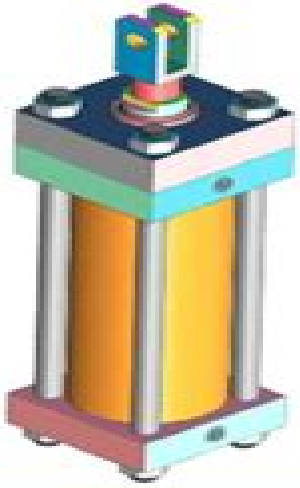

SACHIDANAND JHA

Autodesk Inventor 2014 Practice Exercises

Scott C. Dulebohn

Autodesk Inventor 2014 Practice Exercises:

Delve into the emotional tapestry woven by Crafted by in **Autodesk Inventor 2014 Practice Exercises** . This ebook, available for download in a PDF format (Download in PDF: *), is more than just words on a page; itis a journey of connection and profound emotion. Immerse yourself in narratives that tug at your heartstrings. Download now to experience the pulse of each page and let your emotions run wild.

https://marketlab.rehabmart.com/About/publication/Documents/10%20Uconnect%20Navigation%20Manual.pdf

Table of Contents Autodesk Inventor 2014 Practice Exercises

1. Understanding the eBook Autodesk Inventor 2014 Practice Exercises
    - The Rise of Digital Reading Autodesk Inventor 2014 Practice Exercises
    - Advantages of eBooks Over Traditional Books
2. Identifying Autodesk Inventor 2014 Practice Exercises
    - Exploring Different Genres
    - Considering Fiction vs. Non-Fiction
    - Determining Your Reading Goals
3. Choosing the Right eBook Platform
    - Popular eBook Platforms
    - Features to Look for in an Autodesk Inventor 2014 Practice Exercises
    - User-Friendly Interface
4. Exploring eBook Recommendations from Autodesk Inventor 2014 Practice Exercises
    - Personalized Recommendations
    - Autodesk Inventor 2014 Practice Exercises User Reviews and Ratings
    - Autodesk Inventor 2014 Practice Exercises and Bestseller Lists
5. Accessing Autodesk Inventor 2014 Practice Exercises Free and Paid eBooks
    - Autodesk Inventor 2014 Practice Exercises Public Domain eBooks
    - Autodesk Inventor 2014 Practice Exercises eBook Subscription Services
    - Autodesk Inventor 2014 Practice Exercises Budget-Friendly Options

6. Navigating Autodesk Inventor 2014 Practice Exercises eBook Formats
    - ePub, PDF, MOBI, and More
    - Autodesk Inventor 2014 Practice Exercises Compatibility with Devices
    - Autodesk Inventor 2014 Practice Exercises Enhanced eBook Features
7. Enhancing Your Reading Experience
    - Adjustable Fonts and Text Sizes of Autodesk Inventor 2014 Practice Exercises
    - Highlighting and Note-Taking Autodesk Inventor 2014 Practice Exercises
    - Interactive Elements Autodesk Inventor 2014 Practice Exercises
8. Staying Engaged with Autodesk Inventor 2014 Practice Exercises
    - Joining Online Reading Communities
    - Participating in Virtual Book Clubs
    - Following Authors and Publishers Autodesk Inventor 2014 Practice Exercises
9. Balancing eBooks and Physical Books Autodesk Inventor 2014 Practice Exercises
    - Benefits of a Digital Library
    - Creating a Diverse Reading Collection Autodesk Inventor 2014 Practice Exercises
10. Overcoming Reading Challenges
    - Dealing with Digital Eye Strain
    - Minimizing Distractions
    - Managing Screen Time
11. Cultivating a Reading Routine Autodesk Inventor 2014 Practice Exercises
    - Setting Reading Goals Autodesk Inventor 2014 Practice Exercises
    - Carving Out Dedicated Reading Time
12. Sourcing Reliable Information of Autodesk Inventor 2014 Practice Exercises
    - Fact-Checking eBook Content of Autodesk Inventor 2014 Practice Exercises
    - Distinguishing Credible Sources
13. Promoting Lifelong Learning
    - Utilizing eBooks for Skill Development
    - Exploring Educational eBooks
14. Embracing eBook Trends
    - Integration of Multimedia Elements

- Interactive and Gamified eBooks

Autodesk Inventor 2014 Practice Exercises Introduction

In todays digital age, the availability of Autodesk Inventor 2014 Practice Exercises books and manuals for download has revolutionized the way we access information. Gone are the days of physically flipping through pages and carrying heavy textbooks or manuals. With just a few clicks, we can now access a wealth of knowledge from the comfort of our own homes or on the go. This article will explore the advantages of Autodesk Inventor 2014 Practice Exercises books and manuals for download, along with some popular platforms that offer these resources. One of the significant advantages of Autodesk Inventor 2014 Practice Exercises books and manuals for download is the cost-saving aspect. Traditional books and manuals can be costly, especially if you need to purchase several of them for educational or professional purposes. By accessing Autodesk Inventor 2014 Practice Exercises versions, you eliminate the need to spend money on physical copies. This not only saves you money but also reduces the environmental impact associated with book production and transportation. Furthermore, Autodesk Inventor 2014 Practice Exercises books and manuals for download are incredibly convenient. With just a computer or smartphone and an internet connection, you can access a vast library of resources on any subject imaginable. Whether youre a student looking for textbooks, a professional seeking industry-specific manuals, or someone interested in self-improvement, these digital resources provide an efficient and accessible means of acquiring knowledge. Moreover, PDF books and manuals offer a range of benefits compared to other digital formats. PDF files are designed to retain their formatting regardless of the device used to open them. This ensures that the content appears exactly as intended by the author, with no loss of formatting or missing graphics. Additionally, PDF files can be easily annotated, bookmarked, and searched for specific terms, making them highly practical for studying or referencing. When it comes to accessing Autodesk Inventor 2014 Practice Exercises books and manuals, several platforms offer an extensive collection of resources. One such platform is Project Gutenberg, a nonprofit organization that provides over 60,000 free eBooks. These books are primarily in the public domain, meaning they can be freely distributed and downloaded. Project Gutenberg offers a wide range of classic literature, making it an excellent resource for literature enthusiasts. Another popular platform for Autodesk Inventor 2014 Practice Exercises books and manuals is Open Library. Open Library is an initiative of the Internet Archive, a non-profit organization dedicated to digitizing cultural artifacts and making them accessible to the public. Open Library hosts millions of books, including both public domain works and contemporary titles. It also allows users to borrow digital copies of certain books for a limited period, similar to a library lending system. Additionally, many universities and educational institutions have their own digital libraries that provide free access to PDF books and manuals. These libraries often offer academic texts, research papers, and technical manuals, making them invaluable resources for students and researchers.

Some notable examples include MIT OpenCourseWare, which offers free access to course materials from the Massachusetts Institute of Technology, and the Digital Public Library of America, which provides a vast collection of digitized books and historical documents. In conclusion, Autodesk Inventor 2014 Practice Exercises books and manuals for download have transformed the way we access information. They provide a cost-effective and convenient means of acquiring knowledge, offering the ability to access a vast library of resources at our fingertips. With platforms like Project Gutenberg, Open Library, and various digital libraries offered by educational institutions, we have access to an ever-expanding collection of books and manuals. Whether for educational, professional, or personal purposes, these digital resources serve as valuable tools for continuous learning and self-improvement. So why not take advantage of the vast world of Autodesk Inventor 2014 Practice Exercises books and manuals for download and embark on your journey of knowledge?

FAQs About Autodesk Inventor 2014 Practice Exercises Books

How do I know which eBook platform is the best for me? Finding the best eBook platform depends on your reading preferences and device compatibility. Research different platforms, read user reviews, and explore their features before making a choice. Are free eBooks of good quality? Yes, many reputable platforms offer high-quality free eBooks, including classics and public domain works. However, make sure to verify the source to ensure the eBook credibility. Can I read eBooks without an eReader? Absolutely! Most eBook platforms offer web-based readers or mobile apps that allow you to read eBooks on your computer, tablet, or smartphone. How do I avoid digital eye strain while reading eBooks? To prevent digital eye strain, take regular breaks, adjust the font size and background color, and ensure proper lighting while reading eBooks. What the advantage of interactive eBooks? Interactive eBooks incorporate multimedia elements, quizzes, and activities, enhancing the reader engagement and providing a more immersive learning experience. Autodesk Inventor 2014 Practice Exercises is one of the best book in our library for free trial. We provide copy of Autodesk Inventor 2014 Practice Exercises in digital format, so the resources that you find are reliable. There are also many Ebooks of related with Autodesk Inventor 2014 Practice Exercises. Where to download Autodesk Inventor 2014 Practice Exercises online for free? Are you looking for Autodesk Inventor 2014 Practice Exercises PDF? This is definitely going to save you time and cash in something you should think about.

Find Autodesk Inventor 2014 Practice Exercises :

2010 uconnect navigation manual

2010 ford escape manual transmission
2010 flstc service manual
2010 audi q7 seat belt manual
~~2010 hyundai sonata manual~~
2010 chevy chevrolet traverse owners manual
2010 tahoe navigation manual
2010 honda civic check engine light
~~2010 mercedes gl350 repair manual~~
2010 nissan xterra service manual
2010 mini cooper convertible owners manual
2010 volvo truck stereo manual
~~2010 classroom pronouncer guide spelling~~
2010 fuel economy guide
2010 mazda cx 9 service manual

Autodesk Inventor 2014 Practice Exercises :

ritterkreuzträger oberst hans von schlebrügge vom - Dec 08 2022
web ohne abbildungen mechanische musikinstrumente früherer zeiten und ihre musik mit kompositionen für mechanische musikinstrumente von franz benda c ph em bach leopold mozart und beethoven pdf download
ritterkreuzträger oberst hans von schlebrügge vom ritterkreuzträger von - Feb 10 2023
web may 26th 2020 unweit hinter der kapelle harrt in seinem grab ein ordenskamerad von oberst michaelis general der artillerie walther von seydlitz kurzbach die lebenswege dieser beiden ritterkreuzträger könnten kaum unterschiedlicher sein von hans michaelis können die deutschen einst voller stolz reden sein leben und wirken galt vom ersten
die kreuzritter wikipedia - Jul 03 2022
web die kreuzritter steht für die kreuzfahrer in den kreuzzügen siehe kreuzzug die kreuzritter roman polnischer historienroman 1900 von henryk sienkiewicz filme die kreuzritter film polnischer historienfilm aus dem jahr 1960 die kreuzritter the crusaders italienischer historienfilm aus dem jahr 2001 die kreuzritter 2 soldaten
ritterkreuz des eisernen kreuzes wikipedia - Sep 05 2022
web gerhard von seemen publizierte 1955 mit seinem buch die ritterkreuzträger 1939 1945 basierend auf eigener recherche aufrufe in zeitungen befragung anderer traditionsverbände auswertung von tageszeitungen z b völkischen beobachter eine

liste der ritterkreuzträger zugriff auf die unterlagen der ehemaligen deutschen

ritterkreuztrager oberst hans von schlebrugge vom uniport edu - Aug 04 2022

web jul 20 2023 download and install ritterkreuztrager oberst hans von schlebrugge vom appropriately simple salerno american operations from the beaches to the volturno 9 september 6 october 1943 1944 die ritterkreuzträger der deutschen wehrmacht 1939 1945 franz thomas 1985

kreuzritter geschichte - Jun 02 2022

web geschichte der kreuzritter im jahre 1095 nach christus rief papst urban ii im konzil von clermont zum beginn der kreuzzüge auf im frühjahr 1096 brechen die kreuzfahrer in vier heeren unter führung französischer fürsten auf die von dem araber mohammed in mekka 630 begründete religion des islams wurde zur bedrohung für byzanz

duden ritterkreuzträger rechtschreibung bedeutung - Mar 31 2022

web definition rechtschreibung synonyme und grammatik von ritterkreuzträger auf duden online nachschlagen wörterbuch der deutschen sprache

ritterkreuzträger oberst hans von schlebrügge vom ritterkreuzträger von - Jan 09 2023

web ritterkreuzträger oberst hans von schlebrügge vom ritterkreuzträger von narvik zum begründer der skijägertruppe der wehrmacht flechsig verlag by roland kaltenegger

ritterkreuzträger oberst hans von schlebrügge vom ritterkreuzträger von - Jan 29 2022

web ritterkreuzträger oberst hans von schlebrügge vom ritterkreuzträger von narvik zum begründer der skijägertruppe der wehrmacht flechsig verlag by roland kaltenegger ritterkreuz des eisernen kreuzes

ritterkreuzträger oberst hans von schlebrügge vom ritterkreuzträger von - Jun 14 2023

web ritterkreuzträger oberst hans von schlebrügge vom ritterkreuzträger von narvik zum begründer der skijägertruppe der wehrmacht flechsig verlag by roland kaltenegger mappe ritterkreuz hans christern ritterkreuzträger des dak

ritterkreuzträger oberst hans von schlebrügge vom ritterkreuzträger von - Dec 28 2021

web ritterkreuzträger oberst hans von schlebrügge vom ritterkreuzträger von narvik zum begründer der skijägertruppe der wehrmacht flechsig verlag by roland kaltenegger ritterkreuz hersteller militaria berlin ritterkreuzträger oberst hans von schlebrügge roland ritterkreuz und dokumenten teil nachlaß von oberst paul search all list for

ritterkreuzträger oberst hans von schlebrügge vom - Aug 16 2023

web ritterkreuzträger oberst hans von schlebrügge vom ritterkreuzträger von narvik zum begründer der skijägertruppe der wehrmacht

ritterkreuztrager oberst hans von schlebrugge vom copy - Oct 06 2022

web jul 28 2023 ritterkreuztrager oberst hans von schlebrugge vom is available in our book collection an online access to it

is set as public so you can get it instantly our digital library hosts in multiple locations allowing you to get the most less latency time to download

ritterkreuzträger oberst hans von schlebrügge vom ritterkreuzträger von - Apr 12 2023

web ritterkreuzträger oberst hans von schlebrügge vom ritterkreuzträger von narvik zum begründer der skijägertruppe der wehrmacht flechsig verlag by roland kaltenegger adolf hitler neu gestiftet wurde das ritterkreuz wurde über

ritterkreuzträger translation in english german english - May 01 2022

web die ritterkreuzträger 1939 1945 die ritterkreuzträger sämtlicher wehrmachtteile brillanten schwerter und eichenlaubträger in der reihenfolge der verleihung anhang mit verleihungsbestimmungen und weiteren angaben germany podzun verlag

ritterkreuztrager oberst hans von schlebrugge vom christoph - Nov 07 2022

web skillfully as sharpness of this ritterkreuztrager oberst hans von schlebrugge vom can be taken as capably as picked to act salerno american operations from the beaches to the volturno 9 september 6 october 1943 1944

oberst hans von schlebrügge vom ritterkreuzträger von - May 13 2023

web oberst hans von schlebrügge vom ritterkreuzträger von narvik zum begründer der skijägertruppe der wehrmacht r kaltenegger 160 s 139 abb 17 x 24 cm geb flechsig

ritterkreuzträger oberst hans von schlebrügge vom ritterkreuzträger von - Mar 11 2023

web ritterkreuzträger oberst hans von schlebrügge vom ritterkreuzträger von narvik zum begründer der skijägertruppe der wehrmacht flechsig verlag by roland kaltenegger

ritterkreuzträger oberst hans von schlebrügge vom - Jul 15 2023

web ritterkreuzträger oberst hans von schlebrügge vom ritterkreuzträger von narvik zum begründer der skijägertruppe der wehrmacht flechsig verlag roland kaltenegger isbn 9783803500496 kostenloser versand für

ritterkreuzträger oberst hans von schlebrügge vom ritterkreuzträger von - Feb 27 2022

web ritterkreuzträger oberst hans von schlebrügge vom ritterkreuzträger von narvik zum begründer der skijägertruppe der wehrmacht flechsig verlag by roland kaltenegger ritterkreuzträger des dak may 25th 2020 auf diesen seiten finden sie alle informationen zum feldzug in afrika von 1941 1943 des deutschen afrikakorps

el enigma del evangelio triana el paseo bizzarrro nº 4 ebook - Sep 25 2023

web lee ahora en digital con la aplicación gratuita kindle el enigma del evangelio triana el paseo bizzarrro nº 4 ebook muñoz gijón rancio julio domínguez ruiz cristina

el enigma del evangelio triana casa del libro - Feb 18 2023

web en el popular barrio de triana hay un dicho sobre el grado de verdad de cualquier sentencia que un tercero entona por

derecho eso es lavangelio pocos saben que esa
el enigma del evangelio triana 4 el paseo bizzarro - Jun 22 2023
web el enigma del evangelio triana el paseo bizzarrro nº 4 ebook muñoz gijón rancio julio domínguez ruiz cristina amazon com mx tienda kindle
el enigma del evangelio triana by julio muñoz gijón rancio - Jan 17 2023
web amazon com el enigma del evangelio triana el paseo bizzarrro nº 4 spanish edition ebook muñoz gijón rancio julio domínguez ruiz cristina tienda kindle
el enigma del evangelio triana 4 bizzarro iberlibro com - Nov 03 2021

el enigma del evangelio triana el paseo bizzarrro nº 4 - Aug 24 2023
web el enigma del evangelio triana el paseo bizzarrro nº 4 spanish edition ebook muñoz gijón rancio julio domínguez ruiz cristina amazon com au kindle store
el enigma del evangelio triana e kitap julio muñoz gijón - Jul 11 2022
web jan 8 2021 el enigma del evangelio triana el paseo bizzarrro nº 4 de julio muñoz gijón rancio cristina domínguez ruiz descripción en el popular barrio de triana
el enigma del evangelio triana kobo com - Sep 13 2022
web en el popular barrio de triana hay un dicho sobre el grado de verdad de cualquier sentencia que un tercero entona por derecho eso es lavangelio with el enigma del
el enigma del evangelio triana el paseo bizzarrro e nesbit - Mar 07 2022
web see authoritative translations of el enigma in english with example sentences and audio pronunciations learn spanish translation la verdadera identidad de jack el
el enigma del evangelio triana el paseo bizzarrro 2022 2013 - Apr 08 2022
web proclamation el enigma del evangelio triana el paseo bizzarrro can be one of the options to accompany you once having additional time it will not waste your time
el enigma del evangelio triana 4 el paseo bizzarro - Mar 19 2023
web en el popular barrio sevillano de triana hay un dicho que se aplica al grado de verdad de cualquier cosa que se dice por derecho eso es lavangelio pero pocos saben el origen
el enigma del evangelio triana e bok julio muñoz gijón - May 09 2022
web el enigma del evangelio triana el paseo bizzarrro 3 3 férreo socialismo de estado rooseveltiano por último una curiosa guía de lectura y una galería de argumentos

el enigma del evangelio triana el paseo bizzarrro nº 4 ebook - May 21 2023
web pakoko el enigma del evangelio triana 8 2 de marzo de 2022 hilarante como las anteriores un no parar de reír durante su lectura nos ofrece la teoría de un estudioso
el enigma del evangelio triana el paseo bizzarrro nº 4 de julio - Jun 10 2022
web läs el enigma del evangelio triana gratis av julio muñoz gijón rancio finns som e bok prova gratis i 30 dagar
el enigma del evangelio triana lecturalia - Apr 20 2023
web el enigma del evangelio triana 4 el paseo bizzarro de julio muñoz gijón en iberlibro com isbn 10 8494811274 isbn 13 9788494811272 el paseo
el enigma del evangelio triana overdrive - Dec 04 2021
web el enigma del evangelio triana 4 bizzarro de julio muñoz gijón en iberlibro com isbn 10 8494811274 isbn 13 9788494811272 el paseo 2018 tapa blanda
el enigma del evangelio triana 4 el paseo bizzarro - Oct 14 2022
web sep 21 2022 read el enigma del evangelio triana by julio muñoz gijón rancio available from rakuten kobo en el popular barrio de triana hay un dicho sobre el
enigma transfagarasanului documentar 2008 youtube - Jan 05 2022
web nov 5 2018 en el popular barrio de triana hay un dicho sobre el grado de verdad de cualquier sentencia que un tercero entona por derecho eso es lavangelio pocos
el enigma del evangelio triana 8ª ed el paseo - Jul 23 2023
web el enigma del evangelio triana 4 el paseo bizzarro julio muñoz gijón julio muñoz gijón amazon es libros
el enigma del evangelio triana el paseo bizzarrro nº 4 - Dec 16 2022
web nov 5 2018 propósito comprar el libro el enigma del evangelio triana de ranciosevillano el paseo editorial 9788494811272 con envÍo gratis desde 18
el enigma del evangelio triana librería agapea - Nov 15 2022
web el enigma del evangelio triana 4 el paseo bizzarro von julio muñoz gijón bei abebooks de isbn 10 8494811274 isbn 13 9788494811272 el paseo
el enigma spanish to english translation spanishdictionary com - Feb 06 2022
web feb 6 2012 nicolae mazilu fost ofiter in arma geniu comandantul trupelor care au participat la construirea unui dintre cele mai spectaculoase drumuri montane europene
el enigma del evangelio triana by julio muñoz gijón rancio - Aug 12 2022
web bir julio muñoz gijón rancio eseri olan el enigma del evangelio

zen confidential confessions of a wayward monk by haubner - Nov 24 2021
web find many great new used options and get the best deals for zen confidential confessions of a wayward monk by haubner paperback at the best online prices at
zen confidential confessions of a wayward monk google books - Jul 01 2022
web a screenwriter and stand up comic s hilarious and profound account of his journey into zen monkhood featuring a foreword by leonard cohen shozan jack haubner is the david
zen confidential confessions of a wayward monk - Apr 29 2022
web memoir of zen buddhist debunks myth of the monk as a person who has sacrificed a juicy life with dark humor and an exploration of anger and deviance this slender collection of
zen confidential confessions of a wayward monk amazon com - Jan 07 2023
web zen confidential confessions of a wayward monk audible audiobook unabridged shozan jack haubner author narrator 2 more 226 ratings see all formats and
zen confidential confessions of a wayward monk audio - Dec 06 2022
web zen confidential confessions of a wayward monk audio download shozan jack haubner leonard cohen shozan jack haubner audible studios amazon co uk books
zen confidential confessions of a wayward monk alibris - Nov 05 2022
web buy zen confidential confessions of a wayward monk by shozan jack haubner online at alibris we have new and used copies available in 2 editions starting at 1 45 shop
zen confidential confessions of a wayward monk - Mar 09 2023
web zen confidential confessions of a wayward monk haubner shozan jack zen buddhists united states biography buddhist monks united states biography
zen confidential confessions of a wayward monk audible - Mar 29 2022
web zen confidential confessions of a wayward monk hörbuch download shozan jack haubner leonard cohen shozan jack haubner audible studios amazon de bücher
zen confidential confessions of a wayward monk - Jun 12 2023
web buy zen confidential confessions of a wayward monk by shozan jack haubner isbn 9781611800333 from amazon s book store everyday low prices and free delivery on
zen confidential confessions of a wayward monk unabridged - Aug 02 2022
web dec 9 2014 these hilarious essays on life inside and outside a zen monastery make up the spiritual memoir of shozan jack haubner a zen monk who didn t really start out to

zen confidential confessions of a wayward monk google books - Oct 04 2022
web may 14 2013 zen confidential confessions of a wayward monk shozan jack haubner shambhala publications may 14 2013 religion 240 pages a screenwriter

zen confidential confessions of a wayward monk publishers - Feb 08 2023
web tender portraits emerge as haubner brings hard won zen insights to the legacy of a sometimes violent radical conservative father and finds a beloved mentor in a hard

zen confidential confessions of a wayward monk google play - May 31 2022
web zen confidential confessions of a wayward monk ebook written by shozan jack haubner read this book using google play books app on your pc android ios

zen confidential on apple books - Jan 27 2022
web tender portraits emerge as haubner brings hard won zen insights to the legacy of a sometimes violent radical conservative father and finds a beloved mentor in a hard

zen confidential confessions of a wayward - May 11 2023
web may 14 2013 tender portraits emerge as haubner brings hard won zen insights to the legacy of a sometimes violent radical conservative father and finds a beloved mentor

loading interface goodreads - Dec 26 2021
web discover and share books you love on goodreads

zen confidential confessions of a wayward monk philpapers - Sep 03 2022
web a screenwriter and stand up comic s hilarious and profound account of his journey into zen monkhood featuring a foreword by leonard cohen shozan jack haubner is the david

zen confidential confessions of a wayward monk - Aug 14 2023
web may 14 2013 in this enjoyably entertaining read which includes a foreword by songwriter leonard cohen an ordained zen buddhist monk haubner doesn t claim to be an expert

zen confidential confessions of a wayward monk kindle edition - Jul 13 2023
web may 14 2013 zen confidential confessions of a wayward monk kindle edition by haubner shozan jack cohen leonard religion spirituality kindle ebooks

zen confidential confessions of a wayward monk - Apr 10 2023
web apr 3 2013 shozan jack haubner is the pen name of a zen monk whose essays have appeared in the sun tricycle buddhadharma and the new york times as well as in

zen confidential confessions of a wayward monk - Feb 25 2022

web books like zen confidential confessions of a wayward monk find out more recommended books with our spot on books app zen confidential confessions of a