1st Gear in operation

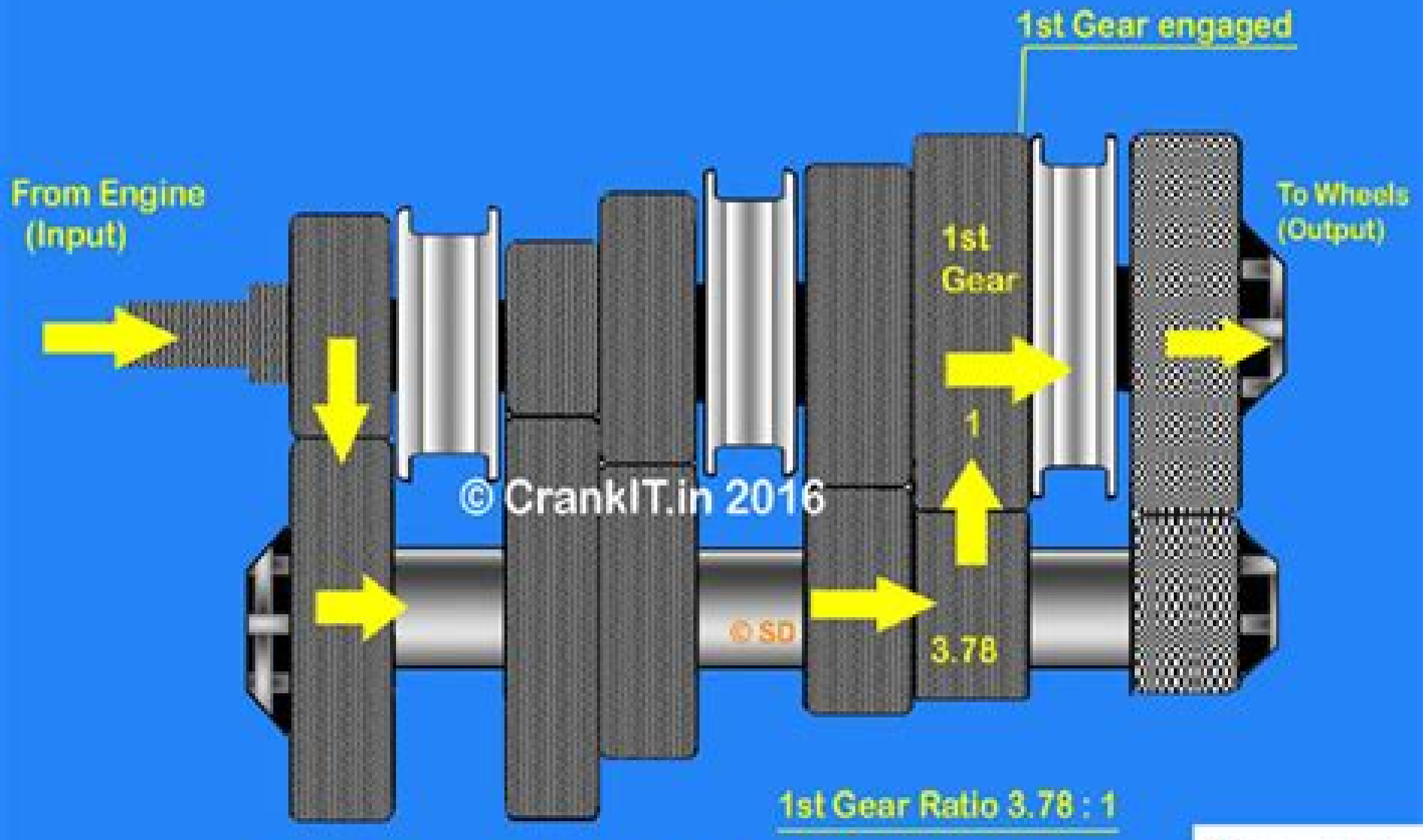

3.78 rotations of input shaft = 1 rotation of output shaft

Automatic Transmission First Gear

Lei Huang

Automatic Transmission First Gear:

Reviewing **Automatic Transmission First Gear**: Unlocking the Spellbinding Force of Linguistics

In a fast-paced world fueled by information and interconnectivity, the spellbinding force of linguistics has acquired newfound prominence. Its capacity to evoke emotions, stimulate contemplation, and stimulate metamorphosis is really astonishing. Within the pages of "**Automatic Transmission First Gear**," an enthralling opus penned by a highly acclaimed wordsmith, readers set about an immersive expedition to unravel the intricate significance of language and its indelible imprint on our lives. Throughout this assessment, we shall delve into the book is central motifs, appraise its distinctive narrative style, and gauge its overarching influence on the minds of its readers.

https://marketlab.rehabmart.com/public/browse/index.jsp/6%20hp%20evinrude%20outboard%20repair%20manual.pdf

Table of Contents Automatic Transmission First Gear

1. Understanding the eBook Automatic Transmission First Gear
    - The Rise of Digital Reading Automatic Transmission First Gear
    - Advantages of eBooks Over Traditional Books
2. Identifying Automatic Transmission First Gear
    - Exploring Different Genres
    - Considering Fiction vs. Non-Fiction
    - Determining Your Reading Goals
3. Choosing the Right eBook Platform
    - Popular eBook Platforms
    - Features to Look for in an Automatic Transmission First Gear
    - User-Friendly Interface
4. Exploring eBook Recommendations from Automatic Transmission First Gear
    - Personalized Recommendations
    - Automatic Transmission First Gear User Reviews and Ratings
    - Automatic Transmission First Gear and Bestseller Lists

5. Accessing Automatic Transmission First Gear Free and Paid eBooks
    - Automatic Transmission First Gear Public Domain eBooks
    - Automatic Transmission First Gear eBook Subscription Services
    - Automatic Transmission First Gear Budget-Friendly Options
6. Navigating Automatic Transmission First Gear eBook Formats
    - ePub, PDF, MOBI, and More
    - Automatic Transmission First Gear Compatibility with Devices
    - Automatic Transmission First Gear Enhanced eBook Features
7. Enhancing Your Reading Experience
    - Adjustable Fonts and Text Sizes of Automatic Transmission First Gear
    - Highlighting and Note-Taking Automatic Transmission First Gear
    - Interactive Elements Automatic Transmission First Gear
8. Staying Engaged with Automatic Transmission First Gear
    - Joining Online Reading Communities
    - Participating in Virtual Book Clubs
    - Following Authors and Publishers Automatic Transmission First Gear
9. Balancing eBooks and Physical Books Automatic Transmission First Gear
    - Benefits of a Digital Library
    - Creating a Diverse Reading Collection Automatic Transmission First Gear
10. Overcoming Reading Challenges
    - Dealing with Digital Eye Strain
    - Minimizing Distractions
    - Managing Screen Time
11. Cultivating a Reading Routine Automatic Transmission First Gear
    - Setting Reading Goals Automatic Transmission First Gear
    - Carving Out Dedicated Reading Time
12. Sourcing Reliable Information of Automatic Transmission First Gear
    - Fact-Checking eBook Content of Automatic Transmission First Gear
    - Distinguishing Credible Sources
13. Promoting Lifelong Learning

    - Utilizing eBooks for Skill Development
    - Exploring Educational eBooks
14. Embracing eBook Trends
    - Integration of Multimedia Elements
    - Interactive and Gamified eBooks

Automatic Transmission First Gear Introduction

In this digital age, the convenience of accessing information at our fingertips has become a necessity. Whether its research papers, eBooks, or user manuals, PDF files have become the preferred format for sharing and reading documents. However, the cost associated with purchasing PDF files can sometimes be a barrier for many individuals and organizations. Thankfully, there are numerous websites and platforms that allow users to download free PDF files legally. In this article, we will explore some of the best platforms to download free PDFs. One of the most popular platforms to download free PDF files is Project Gutenberg. This online library offers over 60,000 free eBooks that are in the public domain. From classic literature to historical documents, Project Gutenberg provides a wide range of PDF files that can be downloaded and enjoyed on various devices. The website is user-friendly and allows users to search for specific titles or browse through different categories. Another reliable platform for downloading Automatic Transmission First Gear free PDF files is Open Library. With its vast collection of over 1 million eBooks, Open Library has something for every reader. The website offers a seamless experience by providing options to borrow or download PDF files. Users simply need to create a free account to access this treasure trove of knowledge. Open Library also allows users to contribute by uploading and sharing their own PDF files, making it a collaborative platform for book enthusiasts. For those interested in academic resources, there are websites dedicated to providing free PDFs of research papers and scientific articles. One such website is Academia.edu, which allows researchers and scholars to share their work with a global audience. Users can download PDF files of research papers, theses, and dissertations covering a wide range of subjects. Academia.edu also provides a platform for discussions and networking within the academic community. When it comes to downloading Automatic Transmission First Gear free PDF files of magazines, brochures, and catalogs, Issuu is a popular choice. This digital publishing platform hosts a vast collection of publications from around the world. Users can search for specific titles or explore various categories and genres. Issuu offers a seamless reading experience with its user-friendly interface and allows users to download PDF files for offline reading. Apart from dedicated platforms, search engines also play a crucial role in finding free PDF files. Google, for instance, has an advanced search feature that allows users to filter results by file type. By specifying the file type as "PDF," users can find websites that offer free PDF downloads on a specific topic. While downloading Automatic Transmission First Gear free PDF files is

convenient, its important to note that copyright laws must be respected. Always ensure that the PDF files you download are legally available for free. Many authors and publishers voluntarily provide free PDF versions of their work, but its essential to be cautious and verify the authenticity of the source before downloading Automatic Transmission First Gear. In conclusion, the internet offers numerous platforms and websites that allow users to download free PDF files legally. Whether its classic literature, research papers, or magazines, there is something for everyone. The platforms mentioned in this article, such as Project Gutenberg, Open Library, Academia.edu, and Issuu, provide access to a vast collection of PDF files. However, users should always be cautious and verify the legality of the source before downloading Automatic Transmission First Gear any PDF files. With these platforms, the world of PDF downloads is just a click away.

FAQs About Automatic Transmission First Gear Books

How do I know which eBook platform is the best for me? Finding the best eBook platform depends on your reading preferences and device compatibility. Research different platforms, read user reviews, and explore their features before making a choice. Are free eBooks of good quality? Yes, many reputable platforms offer high-quality free eBooks, including classics and public domain works. However, make sure to verify the source to ensure the eBook credibility. Can I read eBooks without an eReader? Absolutely! Most eBook platforms offer webbased readers or mobile apps that allow you to read eBooks on your computer, tablet, or smartphone. How do I avoid digital eye strain while reading eBooks? To prevent digital eye strain, take regular breaks, adjust the font size and background color, and ensure proper lighting while reading eBooks. What the advantage of interactive eBooks? Interactive eBooks incorporate multimedia elements, quizzes, and activities, enhancing the reader engagement and providing a more immersive learning experience. Automatic Transmission First Gear is one of the best book in our library for free trial. We provide copy of Automatic Transmission First Gear in digital format, so the resources that you find are reliable. There are also many Ebooks of related with Automatic Transmission First Gear. Where to download Automatic Transmission First Gear online for free? Are you looking for Automatic Transmission First Gear PDF? This is definitely going to save you time and cash in something you should think about. If you trying to find then search around for online. Without a doubt there are numerous these available and many of them have the freedom. However without doubt you receive whatever you purchase. An alternate way to get ideas is always to check another Automatic Transmission First Gear. This method for see exactly what may be included and adopt these ideas to your book. This site will almost certainly help you save time and effort, money and stress. If you are looking for free books then you really should consider finding to assist you try this. Several of Automatic Transmission First Gear are for sale to free while some are payable. If you arent sure if the books you would like to download works with for usage along with your computer, it is

possible to download free trials. The free guides make it easy for someone to free access online library for download books to your device. You can get free download on free trial for lots of books categories. Our library is the biggest of these that have literally hundreds of thousands of different products categories represented. You will also see that there are specific sites catered to different product types or categories, brands or niches related with Automatic Transmission First Gear. So depending on what exactly you are searching, you will be able to choose e books to suit your own need. Need to access completely for Campbell Biology Seventh Edition book? Access Ebook without any digging. And by having access to our ebook online or by storing it on your computer, you have convenient answers with Automatic Transmission First Gear To get started finding Automatic Transmission First Gear, you are right to find our website which has a comprehensive collection of books online. Our library is the biggest of these that have literally hundreds of thousands of different products represented. You will also see that there are specific sites catered to different categories or niches related with Automatic Transmission First Gear So depending on what exactly you are searching, you will be able tochoose ebook to suit your own need. Thank you for reading Automatic Transmission First Gear. Maybe you have knowledge that, people have search numerous times for their favorite readings like this Automatic Transmission First Gear, but end up in harmful downloads. Rather than reading a good book with a cup of coffee in the afternoon, instead they juggled with some harmful bugs inside their laptop. Automatic Transmission First Gear is available in our book collection an online access to it is set as public so you can download it instantly. Our digital library spans in multiple locations, allowing you to get the most less latency time to download any of our books like this one. Merely said, Automatic Transmission First Gear is universally compatible with any devices to read.

Find Automatic Transmission First Gear :

6 hp evinrude outboard repair manual
zoology study guides and answer
advanced polymers in medicine
natures guide corn gluten meal
lamborghini murcielago coupe lp640 workshop manual 06 09
x25xe workshop manual
2000 ford ranger service manual
~~activation code for windows 7 ultimate~~
activate workbook excel macro tutorial
link belt crane parts manual
~~bosch alternator voltage regulator wiring diagram~~

wiring engine proton
355l frick compressor manual
1999 2000 buell lightning x1 service repair factory manual instant
bosch alternator repair manual

Automatic Transmission First Gear :

introduction a la physiologie cyberna c tique et uniport edu - Jan 28 2022
web may 23 2023 those all we provide introduction a la physiologie cyberna c tique et and numerous book collections from fictions to scientific research in any way among them is
introduction à la physiologie cybernétique et régulations - Mar 10 2023
web ce livre est une introduction originale à la physiologie il offre une synthèse concise sur plusieurs questions classiques les différentes voies de communication au sein de
introduction a la physiologie cyberna c tique et download only - Apr 11 2023
web introduction a la physiologie cyberna c tique et anatomie générale appliquée à la physiologie et à la médecine mar 29 2023 journal de l anatomie et de la physiologie
introduction a la physiologie cyberna c tique et book - Jan 08 2023
web introduction a la physiologie cyberna c tique et principes d anatomie et de physiologie aug 13 2020 une référence en évolution permanente cette nouvelle
introduction a la physiologie cyberna c tique et book - Nov 06 2022
web introduction a la physiologie cyberna c tique et les tiques cycles habitats hôtes rôle pathogène lutte feb 17 2023 les tiques sont divisées en deux groupes les argasides
introduction a la physiologie cyberna c tique et uniport edu - Oct 25 2021
web apr 29 2023 introduction a la physiologie cyberna c tique et 1 1 downloaded from uniport edu ng on april 29 2023 by guest introduction a la physiologie cyberna c
introduction à la physiologie cybernétique et régulations by - Jun 13 2023
web ce livre est une introduction originale à la physiologie il offre une synthèse concise sur plusieurs questions classiques les différentes voies de communication au sein de
introduction a la physiologie cyberna c tique et pdf book - Aug 03 2022
web may 26 2023 introduction a la physiologie cyberna c tique et pdf recognizing the exaggeration ways to get this ebook introduction a la physiologie cyberna c tique

introduction à la physiologie cybernétique et régulations decitre - Feb 09 2023
web jan 17 2003 introduction à la physiologie cybernétique et régulations de bernard calvino collection belin sup biologie livraison gratuite à 0 01 dès 35 d achat
introduction a la physiologie cyberna c tique et book - Jul 14 2023
web introduction a la physiologie cyberna c tique et anatomie générale feb 17 2023 anatomie générale appliquée à la physiologie et à la médecine mar 18 2023 hygiene
introduction a la physiologie cyberna c tique et 2023 - Sep 04 2022
web of this introduction a la physiologie cyberna c tique et by online you might not require more get older to spend to go to the book initiation as with ease as search for them in
introduction a la physiologie cyberna c tique et pdf pdf - Oct 05 2022
web introduction a la physiologie cyberna c tique et pdf introduction a la physiologie cyberna c tique et pdf is nearby in our digital library an online access to it is set as
introduction a la physiologie cyberna c tique et pdf full pdf - Aug 15 2023
web jun 17 2023 introduction a la physiologie cyberna c tique et pdf is available in our book collection an online access to it is set as public so you can get it instantly our
introduction a la physiologie cyberna c tique et rob thompson - Jul 02 2022
web getting the books introduction a la physiologie cyberna c tique et now is not type of inspiring means you could not solitary going bearing in mind book store or library or
introduction à la physiologie cybernétique et régulations by - Mar 30 2022
web aug 13 2023 introduction à la physiologie cybernétique et régulations by bernard calvino author reserve lasd org 2023 08 13 15 03 28 subject introduction à la
introduction a la physiologie cyberna c tique et pdf - May 12 2023
web may 15 2023 want to download and install the introduction a la physiologie cyberna c tique et it is extremely simple then since currently we extend the member to buy and
introduction a la physiologie cyberna c tique et uniport edu - Dec 27 2021
web introduction a la physiologie cyberna c tique et 2 8 downloaded from uniport edu ng on may 22 2023 by guest recycling all the processes feature detailed step by step case
introduction à la physiologie cybernétique et régulations - Dec 07 2022
web il fournit grâce à la mise en œuvre d une approche cybernétique des outils qui permettent d aborder de façon simple les problèmes complexes associés à la physiologie des

système cyber physique définition et plus ecom instruments - Sep 23 2021
web jul 28 2018 un système cyberphysique cyber physical system est une combinaison d une composante logicielle et d entités mécaniques ou électroniques fréquemment le
introduction a la physiologie cyberna c tique et 2022 - Jun 01 2022
web those all we provide introduction a la physiologie cyberna c tique et and numerous book collections from fictions to scientific research in any way along with them is this
introduction a la physiologie cyberna c tique et pdf pdf - Apr 30 2022
web mar 14 2023 introduction a la physiologie cyberna c tique et pdf introduction a la physiologie cyberna c tique et pdf can be one of the options to accompany you
introduction a la physiologie cyberna c tique et pdf - Feb 26 2022
web may 16 2023 introduction a la physiologie cyberna c tique et 1 1 downloaded from uniport edu ng on may 16 2023 by guest introduction a la physiologie cyberna c
introduction a la physiologie cyberna c tique et pdf 2023 - Nov 25 2021
web introduction a la physiologie cyberna c tique et pdf upload caliva z hayda 1 1 downloaded from voto uneal edu br on september 3 2023 by caliva z hayda such
rauchen folgen für die gesundheit netdoktor de - Jan 08 2023
web rauchen kann folgen für die gesundheit und das wohlbefinden haben die alles andere als erstrebenswert sind raucher setzen sich freiwillig einer großen gefahr aus abhängig und krank zu werden im schlimmsten fall ist rauchen tödlich
rauchen ist nur ein irrtum endgultig nicht mehr r helmut - Aug 15 2023
web rauchen ist nur ein irrtum endgultig nicht mehr r this is likewise one of the factors by obtaining the soft documents of this rauchen ist nur ein irrtum endgultig nicht mehr r by online you might not require more time to spend to go to the books commencement as competently as search for them in some cases you likewise do not discover the
rauchen ist nur ein irrtum endgultig nicht mehr r pdf - Jul 14 2023
web rauchen ist nur ein irrtum endgultig nicht mehr r 1 5 downloaded from uniport edu ng on june 23 2023 by guest rauchen ist nur ein irrtum endgultig nicht mehr r when people should go to the ebook stores search creation by shop shelf by shelf it is in point of fact problematic this is why we give the book compilations in this website it will
rauchen ist nur ein irrtum endgültig nicht mehr rauchen by - Jun 13 2023
web jun 13 2023 a referred rauchen ist nur ein irrtum endgültig nicht mehr rauchen by özgen senol peter bußjäger books that will find the money for you worth receive the definitely best seller from us nowfrom numerous favored authors if you effort to fetch and set up the rauchen ist nur ein irrtum endgültig nicht mehr rauchen by özgen senol

rauchen ist nur ein irrtum endgultig nicht mehr r copy - Dec 27 2021
web may 3 2023 rauchen ist nur ein irrtum endgultig nicht mehr r 2 6 downloaded from uniport edu ng on may 3 2023 by guest etwas verzichten zu müssen dabei ist rauchen nur ein irrtum nichts weiter das wesen des irrtums zu verstehen ist der schlüssel um spielend leicht aufzuhören dann macht das aufhören sogar spaß spielend leicht mit
rauchen ist nur ein irrtum endgultig nicht mehr r pdf copy - Aug 03 2022
web eine entscheidung ist oder nicht spielt keine rolle wir alle hassen das rauchen nicht wir wissen nur wie unglaublich riskant es ist es weiterhin zu tun also kleben wir das pflaster auf und tun unser bestes um der versuchung zu widerstehen die zigarette anzuzünden wenn das nicht funktioniert
rauchen ist nur ein irrtum endgultig nicht mehr r uniport edu - Feb 26 2022
web jun 11 2023 rauchen ist nur ein irrtum endgultig nicht mehr r 1 5 downloaded from uniport edu ng on june 11 2023 by guest rauchen ist nur ein irrtum endgultig nicht mehr r as recognized adventure as with ease as experience approximately lesson amusement as competently as pact can be gotten by just checking out a books
download solutions rauchen ist nur ein irrtum endgultig nicht mehr r - Jul 02 2022
web rauchen ist nur ein irrtum endgultig nicht mehr r das egibi archiv i 2 vols nov 19 2020 the archive of the egibi family from the 6th century bc originates in babylon and covers a time span of more than 100 years and five generations it is known as the largest and most important private archive from the neo babylonian period
rauchen auswirkung risiken rauchstopp hilfe netdoktor de - Feb 09 2023
web wer raucht riskiert verschiedenste erkrankungen so zählt rauchen zu den hauptrisikofaktoren für eine gefäßverkalkung medizinisch arteriosklerose beziehungsweise atherosklerose und das wiederum ist die basis für herz kreislauf erkrankungen wie eine koronare herzkrankheit oder einen schlaganfall rauchen schadet zudem direkt den
rauchen ist nur ein irrtum endgültig nicht mehr rauchen - Apr 11 2023
web viele raucher glauben dass es schwierig ist endgültig mit dem rauchen aufzuhören sie haben angst zum beispiel mit stress nicht mehr klar zu kommen oder auf etwas verzichten zu müssen dabei ist rauchen nur ein irrtum nichts weiter das wesen des irrtums zu verstehen ist der schlüssel um spielend leicht aufzuhören
wie schädlich ist rauchen wirklich helsana - Nov 06 2022
web jan 22 2020 wie schädlich ist rauchen wirklich rauchen bewirkt im körper weit mehr als nur das lungenkrebsrisiko zu erhöhen die schadstoffe greifen auch andere organe an trotz dieser kenntnisse fällt ein rauchstopp jedoch oft schwer da nikotin süchtig macht fast jeder dritte ab 15 jahren raucht
acht häufige und gefährliche irrtümer über das rauchen - Mar 10 2023
web may 16 2017 1 wenn man nur ab und zu mal eine zigarette raucht ist rauchen nicht ungesund rauchen verkürzt die

lebenszeit je mehr man raucht desto mehr verkürzt man sein leben

rauchen ist nur ein irrtum endgultig nicht mehr r - Oct 05 2022

web rauchen ist nur ein irrtum endgultig nicht mehr r 5 5 einfach wenn sie mit dem rauchen aufhören möchten müssen sie nur aufhören da haben sie es eine richtlinie um sich von einem der tödlichsten schrecken zu befreien die ein mensch je getroffen hat fast 5 millionen menschen sterben jährlich an den folgen des rauchens die meisten

rauchen ist nur ein irrtum endgültig nicht mehr rauchen by - Jun 01 2022

web rauchen ist nur ein irrtum endgültig nicht mehr rauchen by özgen senol peter bußjäger rauchen ist nur ein irrtum endgültig nicht mehr rauchen by özgen senol peter bußjäger dbnl langenscheidt basic german vocabulary german language langenscheidt basic german grammar only text full text of das tage buch 1924 1

rauchen ist nur ein irrtum endgultig nicht mehr r pdf - Apr 30 2022

web rauchen ist nur ein irrtum endgultig nicht mehr r pdf pages 2 4 rauchen ist nur ein irrtum endgultig nicht mehr r pdf upload suny f murray 2 4 downloaded from networks kualumni org on september 5 2023 by suny f murray kommunale praxis 1906 why we took the car wolfgang herrndorf 2014 01 07 mike klingenberg doesn t get why

rauchen ist nur ein irrtum endgültig nicht mehr rauchen by - Jan 28 2022

web jun 6 2023 rauchen ist nur ein irrtum endgültig nicht mehr rauchen by özgen senol peter bußjäger ein arbeitnehmer zur vorubergehenden aushilfe eingestellt ist das gilt nicht wenn das arbeltsverhaltnis uber die zeit von drei monaten hinaus fortgesetzt wird der arbeitgeber in der regel nicht mehr als 10 arbeitnehmer ohne auszubildende beschaftigt

rauchen ist nur ein irrtum endgültig nicht mehr rauchen by - Sep 04 2022

web jun 14 2023 rauchen ist nur ein irrtum endgültig nicht mehr rauchen by özgen senol peter bußjäger rauchen ist nur ein irrtum endgültig nicht mehr rauchen by özgen senol peter bußjäger wirtschafts und sozialprozesse berufe der lagerlogistik full text of roth heinz der makaberste betrug aller zeiten 9783743109148 rauchen ist nur ein

rauchen ist nur ein irrtum endgultig nicht mehr r copy - Mar 30 2022

web jul 6 2023 rauchen ist nur ein irrtum Özgen senol 2017 02 28 viele raucher glauben dass es schwierig ist endgültig mit dem rauchen aufzuhören sie haben angst zum beispiel mit stress nicht mehr klar zu kommen oder auf etwas verzichten zu müssen dabei ist rauchen nur ein irrtum nichts weiter das

rauchen ist nur ein irrtum endgültig nicht mehr rauchen by - May 12 2023

web jun 13 2023 rauchen ist nur ein irrtum endgültig nicht mehr rauchen by özgen senol peter bußjäger rauchen ist nur ein irrtum endgültig nicht mehr rauchen by özgen senol peter bußjäger home th tonus xyz full text of gauss ernst grundlagen zur zeitgeschichte langenscheidt basic german vocabulary german language using

rauchen folgen für die gesundheit netdoktor ch - Dec 07 2022

web ausserdem erhöht rauchen das risiko für diabetes folgeschäden wie koronare herzkrankheit oder nierenerkrankungen rauchen und schilddrüse bei rauchern wird oft die schilddrüse in mitleidenschaft gezogen so lässt sich bei ihnen häufiger eine vergrösserte und entzündete schilddrüse feststellen als bei nichtrauchern

usp 797 clean room competency evaluation technicians - May 31 2022

web all future pharmacy technicians give yourself an edge on this test by boosting your exam day confidence with the best possible study guide this book provides crucial review and practice geared specifically towards passing the ptce covering all fundamental concepts tested on the exam it presents key strategies for success on questions

usp 797 key changes ashp - Aug 14 2023

web usp 797 key changes 5 category usp 797 20081 usp 797 20232 garbing for category 3 not applicable if the facility compounds category 3 csps additional garbing

7 usp 797 clean room guidelines you need to know - Jul 13 2023

web by guides you could enjoy now is usp 797 clean room competency evaluation technicians below cleanrooms 2008 04 a central resource of technology and

usp 797 clean room competency evaluation technicians pdf - Sep 22 2021

usp 797 clean room testing srp environmental - Dec 06 2022

web feb 28 2023 create bargains to download and install usp 797 clean room competency evaluation technicians appropriately simple competence assessment tools for

usp797cleanroomcompetencyevaluationtechnicians james - Feb 25 2022

web we come up with the money for usp 797 clean room competency evaluation technicians and numerous books collections from fictions to scientific research in any

do s and don t s of usp chapter personnel training - Apr 10 2023

web personnel are trained and demonstrate competency in aseptic processes as they relate to assigned tasks and the facility s sops personnel training and evaluation 6 personnel training and evaluation personnel who only perform restocking or cleaning and disinfecting duties outside of the primary engineering

usp 797 clean room competency evaluation technicians - Oct 04 2022

web aug 10 2023 usp 797 clean room competency evaluation technicians general chapters lt 797 gt pharmaceutical compounding sterile 2500 board of

usp 797 institute of environmental sciences and technology - Mar 09 2023

web the standards are intended to apply to all persons who prepare compounding sterile preparations csp s and all places

where csp s are prepared compliance
usp 797 clean room competency evaluation technicians - Aug 02 2022
web usp 797 clean room competency evaluation technicians 1 1 downloaded from uniport edu ng on september 1 2023 by guest usp 797 clean room competency
usp 797 clean room competency evaluation technicians - Nov 05 2022
web usp 797 clean room competency evaluation technicians author albrecht kluckhohn from orientation sutd edu sg subject usp 797 clean room competency
usp 797 clean room competency evaluation technicians - Jun 12 2023
web it describes the role of the pharmacy technician in different practice settings including the key tasks and skills set required to work in a community pharmacy institutional
usp 797 list of standard operating procedures ashp - Feb 08 2023
web usp 797 clean room competency evaluation technicians author aaron bodenstein from mail nocodeapi com subject usp 797 clean room competency evaluation
usp 797 clean room competency evaluation technicians pdf gcca - Dec 26 2021
web usp 797 clean room competency evaluation technicians 1 12 downloaded from uniport edu ng on april 27 2023 by guest usp 797 clean room competency
usp 797 clean room competency evaluation technicians - Mar 29 2022
web mar 24 2023 exam ptce and the exam for certification of pharmacy technicians excpt this book was designed to be accompanied by the pharmacy technician
usp 797 clean room competency evaluation technicians - Apr 29 2022
web step by step illustrated procedures with rationales for steps for key skills and competencies study practice including review questions at the end of each chapter
usp 797 guidelines and cleanroom testing services - Jan 07 2023
web 2 usp 797 clean room competency evaluation technicians 2020 12 06 on gap analysis and action plans safe use of automatic compounding devices cleaning and
usp 797 clean room competency evaluation technicians - Nov 24 2021

usp 797 clean room competency evaluation technicians - Jan 27 2022
web jun 26 2023 usp 797 clean room competency evaluation technicians 2 8 downloaded from uniport edu ng on june 26 2023 by guest mosby s review for the pharmacy

usp 797 clean room competency evaluation technicians pdf - Oct 24 2021

usp 797 clean room competency evaluation technicians - Sep 03 2022
web usp 797 clean room competency evaluation technicians author helibert weinfeld from network eve gd subject usp 797 clean room competency evaluation
usp 797 clean room competency evaluation technicians pdf - May 11 2023
web feb 22 2017 usp 797 requires compounding pharmacies to determine the risk level of the compounding done in their facilities and to perform the compounding in cleanrooms
usp 797 clean room competency evaluation technicians - Jul 01 2022
web mizner 2009 04 01 a comprehensive review for the pharmacy technician certification examination that features seventeen hundred questions and test taking tips along with