ACC
Do...

PLC's can be programmed in several different languages. The most common are Ladder and STL.

- What Everybody Ought to Know About PLC Programming Languages

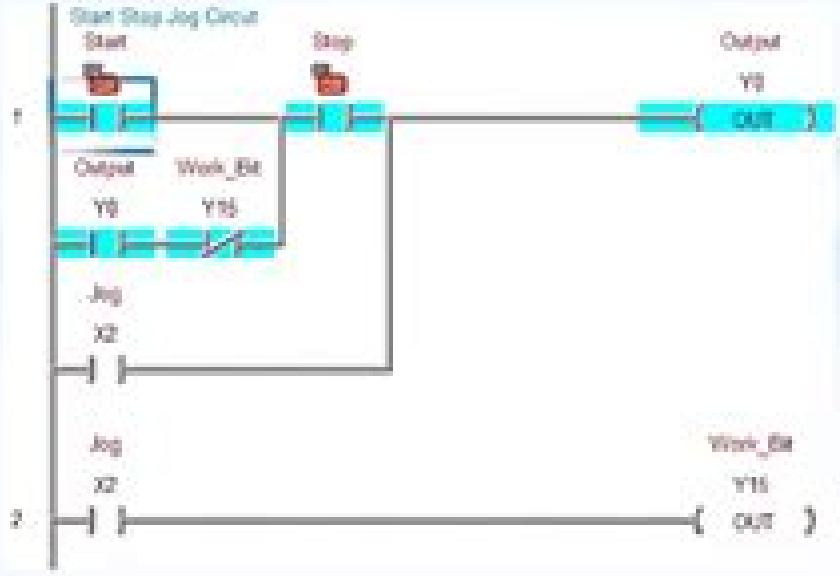

PLC Programming Beginners Guide

Beginners Guide To Plc Programming

D Kirk

Beginners Guide To Plc Programming:

Getting the books **Beginners Guide To Plc Programming** now is not type of inspiring means. You could not only going past ebook buildup or library or borrowing from your associates to door them. This is an totally easy means to specifically get guide by on-line. This online pronouncement Beginners Guide To Plc Programming can be one of the options to accompany you behind having extra time.

It will not waste your time. take on me, the e-book will no question tune you other event to read. Just invest tiny time to edit this on-line message **Beginners Guide To Plc Programming** as competently as evaluation them wherever you are now.

https://marketlab.rehabmart.com/files/uploaded-files/Documents/value_of_2003_ford_expedition.pdf

Table of Contents Beginners Guide To Plc Programming

1. Understanding the eBook Beginners Guide To Plc Programming
    - The Rise of Digital Reading Beginners Guide To Plc Programming
    - Advantages of eBooks Over Traditional Books
2. Identifying Beginners Guide To Plc Programming
    - Exploring Different Genres
    - Considering Fiction vs. Non-Fiction
    - Determining Your Reading Goals
3. Choosing the Right eBook Platform
    - Popular eBook Platforms
    - Features to Look for in an Beginners Guide To Plc Programming
    - User-Friendly Interface
4. Exploring eBook Recommendations from Beginners Guide To Plc Programming
    - Personalized Recommendations
    - Beginners Guide To Plc Programming User Reviews and Ratings
    - Beginners Guide To Plc Programming and Bestseller Lists
5. Accessing Beginners Guide To Plc Programming Free and Paid eBooks

    - Beginners Guide To Plc Programming Public Domain eBooks
    - Beginners Guide To Plc Programming eBook Subscription Services
    - Beginners Guide To Plc Programming Budget-Friendly Options
6. Navigating Beginners Guide To Plc Programming eBook Formats
    - ePub, PDF, MOBI, and More
    - Beginners Guide To Plc Programming Compatibility with Devices
    - Beginners Guide To Plc Programming Enhanced eBook Features
7. Enhancing Your Reading Experience
    - Adjustable Fonts and Text Sizes of Beginners Guide To Plc Programming
    - Highlighting and Note-Taking Beginners Guide To Plc Programming
    - Interactive Elements Beginners Guide To Plc Programming
8. Staying Engaged with Beginners Guide To Plc Programming
    - Joining Online Reading Communities
    - Participating in Virtual Book Clubs
    - Following Authors and Publishers Beginners Guide To Plc Programming
9. Balancing eBooks and Physical Books Beginners Guide To Plc Programming
    - Benefits of a Digital Library
    - Creating a Diverse Reading Collection Beginners Guide To Plc Programming
10. Overcoming Reading Challenges
    - Dealing with Digital Eye Strain
    - Minimizing Distractions
    - Managing Screen Time
11. Cultivating a Reading Routine Beginners Guide To Plc Programming
    - Setting Reading Goals Beginners Guide To Plc Programming
    - Carving Out Dedicated Reading Time
12. Sourcing Reliable Information of Beginners Guide To Plc Programming
    - Fact-Checking eBook Content of Beginners Guide To Plc Programming
    - Distinguishing Credible Sources
13. Promoting Lifelong Learning
    - Utilizing eBooks for Skill Development

- Exploring Educational eBooks

14. Embracing eBook Trends
    - Integration of Multimedia Elements
    - Interactive and Gamified eBooks

Beginners Guide To Plc Programming Introduction

In the digital age, access to information has become easier than ever before. The ability to download Beginners Guide To Plc Programming has revolutionized the way we consume written content. Whether you are a student looking for course material, an avid reader searching for your next favorite book, or a professional seeking research papers, the option to download Beginners Guide To Plc Programming has opened up a world of possibilities. Downloading Beginners Guide To Plc Programming provides numerous advantages over physical copies of books and documents. Firstly, it is incredibly convenient. Gone are the days of carrying around heavy textbooks or bulky folders filled with papers. With the click of a button, you can gain immediate access to valuable resources on any device. This convenience allows for efficient studying, researching, and reading on the go. Moreover, the cost-effective nature of downloading Beginners Guide To Plc Programming has democratized knowledge. Traditional books and academic journals can be expensive, making it difficult for individuals with limited financial resources to access information. By offering free PDF downloads, publishers and authors are enabling a wider audience to benefit from their work. This inclusivity promotes equal opportunities for learning and personal growth. There are numerous websites and platforms where individuals can download Beginners Guide To Plc Programming. These websites range from academic databases offering research papers and journals to online libraries with an expansive collection of books from various genres. Many authors and publishers also upload their work to specific websites, granting readers access to their content without any charge. These platforms not only provide access to existing literature but also serve as an excellent platform for undiscovered authors to share their work with the world. However, it is essential to be cautious while downloading Beginners Guide To Plc Programming. Some websites may offer pirated or illegally obtained copies of copyrighted material. Engaging in such activities not only violates copyright laws but also undermines the efforts of authors, publishers, and researchers. To ensure ethical downloading, it is advisable to utilize reputable websites that prioritize the legal distribution of content. When downloading Beginners Guide To Plc Programming, users should also consider the potential security risks associated with online platforms. Malicious actors may exploit vulnerabilities in unprotected websites to distribute malware or steal personal information. To protect themselves, individuals should ensure their devices have reliable antivirus software installed and validate the legitimacy of the websites they are downloading from. In conclusion, the ability to download Beginners Guide To Plc Programming has transformed the way we access information.

With the convenience, cost-effectiveness, and accessibility it offers, free PDF downloads have become a popular choice for students, researchers, and book lovers worldwide. However, it is crucial to engage in ethical downloading practices and prioritize personal security when utilizing online platforms. By doing so, individuals can make the most of the vast array of free PDF resources available and embark on a journey of continuous learning and intellectual growth.

FAQs About Beginners Guide To Plc Programming Books

What is a Beginners Guide To Plc Programming PDF? A PDF (Portable Document Format) is a file format developed by Adobe that preserves the layout and formatting of a document, regardless of the software, hardware, or operating system used to view or print it. **How do I create a Beginners Guide To Plc Programming PDF?** There are several ways to create a PDF: Use software like Adobe Acrobat, Microsoft Word, or Google Docs, which often have built-in PDF creation tools. Print to PDF: Many applications and operating systems have a "Print to PDF" option that allows you to save a document as a PDF file instead of printing it on paper. Online converters: There are various online tools that can convert different file types to PDF. **How do I edit a Beginners Guide To Plc Programming PDF?** Editing a PDF can be done with software like Adobe Acrobat, which allows direct editing of text, images, and other elements within the PDF. Some free tools, like PDFescape or Smallpdf, also offer basic editing capabilities. **How do I convert a Beginners Guide To Plc Programming PDF to another file format?** There are multiple ways to convert a PDF to another format: Use online converters like Smallpdf, Zamzar, or Adobe Acrobats export feature to convert PDFs to formats like Word, Excel, JPEG, etc. Software like Adobe Acrobat, Microsoft Word, or other PDF editors may have options to export or save PDFs in different formats. **How do I password-protect a Beginners Guide To Plc Programming PDF?** Most PDF editing software allows you to add password protection. In Adobe Acrobat, for instance, you can go to "File" -> "Properties" -> "Security" to set a password to restrict access or editing capabilities. Are there any free alternatives to Adobe Acrobat for working with PDFs? Yes, there are many free alternatives for working with PDFs, such as: LibreOffice: Offers PDF editing features. PDFsam: Allows splitting, merging, and editing PDFs. Foxit Reader: Provides basic PDF viewing and editing capabilities. How do I compress a PDF file? You can use online tools like Smallpdf, ILovePDF, or desktop software like Adobe Acrobat to compress PDF files without significant quality loss. Compression reduces the file size, making it easier to share and download. Can I fill out forms in a PDF file? Yes, most PDF viewers/editors like Adobe Acrobat, Preview (on Mac), or various online tools allow you to fill out forms in PDF files by selecting text fields and entering information. Are there any restrictions when working with PDFs? Some PDFs might have restrictions set by their creator, such as password protection, editing restrictions, or print restrictions. Breaking these restrictions might require specific software or tools, which may or may not be legal depending on

the circumstances and local laws.

Find Beginners Guide To Plc Programming :

value of 2003 ford expedition
~~case 821 wheel loader parts catalog manual~~
2008 anniversary edition harley davidson
dynamic programming models and applications eric v denardo
meteorology today 10th ahrens book
john vachons america photographs and letters from the depression to world war ii
volvo penta service workshop manual
~~science review finals 8th grade~~
~~section 2plant responses answer key~~
mitsubishi l200 service repair manual 1997 2002
business studies study guide for grade 12
~~00 02 zx6r rr service manual~~
takeuchi tb035 repair manual
personalized recipe card book
improved techniques for the extraction of primary forms of energy

Beginners Guide To Plc Programming :

internet explorer 6 download - Apr 12 2023
web jul 12 2023 internet explorer 6 is the set of core web browsing technologies in windows xp these core technologies have recently been updated as part of windows xp service pack 2 sp2 with advanced security technologies
internet explorer İndir gezginler - Jan 09 2023
web dec 1 2016 internet explorer 11 indir hem hızlı hem de akıcı windows 8 ve windows rt nin gücünden tam olarak yararlanmak için tasarlanan internet explorer 11 siteleri neredeyse anında başlatır ve yükler web e yepyeni akıcı bir
internet explorer wikipedia - Jan 29 2022
web internet explorer internet explorer a formerly microsoft internet explorer b and windows internet explorer c commonly abbreviated as ie or msie is a deprecated 6 or discontinued for most modern windows editions series of graphical web

browsers developed by microsoft that were used in the windows line of operating systems

internet explorer 6 bitir bitirebilirsen chip online - Nov 07 2022

web aug 21 2009 internet explorer 8 hızlı ve güvenli ancak çoğunlu ie6 ya devam diyor en son yapılan araştırmalara göre dünya üzerindeki bütün internet kullanıcılarının yüzde 27 2 si ie6 kullanıyor ie7 yüzde 23 1 kullanım oranıyla ikinci ie8 ise yüzde 12 5 ile ikisinin de gerisinde kalıyor

internet explorer 6 - Aug 04 2022

web comments designed for older computers and computers running older operating systems internet explorer 6 lets you explore the web and visit all your favorite sites with ease as long as you have an internet browser and an internet connection you can

internet explorer microsoft download center - May 13 2023

web sadece windows 7 için internet explorer 11 64 bit internet explorer kullanımdan kaldırılmıştır ve 15 haziran 2022 tarihi itibarıyla artık desteklenmemektedir ziyaret ettiğiniz herhangi bir site internet explorer gerektirirse siteyi microsoft edge de ie modunda yeniden yükleyebilirsiniz

download windows xp İçin internet explorer 6 güvenlik - Dec 08 2022

web jun 15 2022 internet explorer 11 son kullanım tarihi 15 06 2022 kullandığınız bir site için ie gerekirse daha hızlı ve modern microsoft edge tarayıcısında ie moduyla siteye gidebilirsiniz microsoft edge kullanın windows xp İçin internet explorer 6 güvenlik güncelleştirmesi kb2797052

internet explorer 6 wikiwand - Feb 10 2023

web internet explorer 6 ie6 microsoft tarafından geliştirilen internet explorer web tarayıcısının 6 sürümüdür ağustos 2001 yılında sunuldu 1999 yılında tanıtılmış olan internet explorer 5 in yerini aldı 2006 yılında ise yerini internet explorer 7 aldı

internet explorer vikipedi - Sep 05 2022

web internet explorer 6 27 ağustos 2001 de çıkmıştır kararlı sürümü 5 mayıs 2008 de çıkmıştır kararlı sürümü 6 0 dır internet explorer 7 internet explorer 7 2006 yılında

download internet explorer 6 from official microsoft download center - Aug 16 2023

web jun 15 2022 internet explorer 6 the content you requested has already retired it s available to download on this page important selecting a language below will dynamically change the complete page content to that language select

internet explorer 6 İpuçları chip online - Jul 03 2022

web feb 5 2002 en çok kullanılan web browser internet explorer yeni versiyonu 6 0 ın türkçe sürümü ile karşınızda chip 6 0 ın en önemli fonksiyonlarını sizler için bir araya getiriyor

internet explorer ın hangi sürümünü kullanıyorum microsoft - Mar 11 2023

web internet explorer desteği 15 haziran 2022 de sona erdi internet explorer 11 windows 10 un belirli sürümlerinde bir microsoft edge güncelleştirmesi aracılığıyla kalıcı olarak devre dışı bırakıldı

internet explorer 6 vikipedi - Jun 14 2023

web internet explorer 6 ie6 microsoft tarafından geliştirilen internet explorer web tarayıcısının 6 sürümüdür ağustos 2001 yılında sunuldu 1999 yılında tanıtılmış olan internet explorer 5 in yerini aldı 2006 yılında ise yerini internet explorer 7 aldı

windows 10 da internet explorer ı kullanma microsoft desteği - Oct 06 2022

web internet explorer desteği 15 haziran 2022 de sona erdi internet explorer 11 windows 10 nin belirli sürümlerinde bir microsoft edge güncelleştirmesi aracılığıyla kalıcı olarak devre dışı bırakılmıştır

internet explorer downloads microsoft support - Feb 27 2022

web support for internet explorer ended on june 15 2022 internet explorer 11 has been permanently disabled through a microsoft edge update on certain versions of windows 10 if any site you visit needs internet explorer 11 you can reload it with internet explorer mode in microsoft edge

internet explorer microsoft download center - Jun 02 2022

web jun 15 2022 download the fast and fluid browser recommended for windows 7 04 internet explorer 11 32 bit for windows 7 only internet explorer was retired on june 15 2022 ie 11 has been permanently disabled through a microsoft edge update on certain versions of windows 10

internet explorer 6 wikipedia - Jul 15 2023

web internet explorer 6 was the last version to be called microsoft internet explorer the software was rebranded as windows internet explorer starting in 2006 with the release of internet explorer 7 internet explorer 6 is no longer supported and is not available for download from microsoft

internet explorer 6 7 veya 8 deki güvensiz dosya listesi - May 01 2022

web Özet internet explorer 6 7 ve 8 sürümleri shdocvw dll dosyasında kodlanmış bir güvenli olmayan dosya listesi içerir güvensiz dosya listesinin amacı bilgisayarınızda sorunlara neden olabilecek bir dosya türünü yanlışlıkla açmanızı önlemektir

internet explorer 6 nın sonu chip online - Mar 31 2022

web jan 31 2010 microsoft un popüler internet tarayıcısı internet explorer 6 nın sonu geldi İşte dev gelişme

internet explorer 6 service pack 1 kb831167 güncelleştirmesi - Dec 28 2021

web may 5 2004 internet explorer 6 service pack 1 kb831167 güncelleştirmesi indir Ücretsiz ve son sürüm güvenlik güncellemeleri programları indirebilir veya detaylı inceleyebilirsiniz explorer güncelleştirmesi

short welcome speech 10 examples format sample - Sep 14 2023

web don t worry this article is going to help you with making a good short welcome speech for an event for school or for

welcoming a chief guest you are going to get some examples basically 10 examples for short welcome speeches and some tips on making a good short welcome speech and how to present it check it out right now

welcome speech for an event in english for students vedantu - Aug 13 2023

web nov 10 2023 short welcome speech for an event this form of welcome speech for the event is helpful when the presenter wishes to keep it simple short and effective without diverting focus from the main event good morning everyone a very warm welcome to all present here respected teachers and the parents and students

welcome speech in english for students school cheif guest - Feb 24 2022

web sep 18 2023 welcome speech in english for students school cheif guest welcome speeches comprise a salutation of the distinguished chief guests and the other attendees you ll need to deliver a powerful welcome speech if you want people to feel welcomed

anchoring script for quiz competition with pdf - Jun 30 2022

web may 8 2022 welcome speech for school educational institution good morning afternoon evening to our respected principal sir ma am his her name our participants judges and everyone present here

welcome speech in english 700 words speech top 5 - Oct 03 2022

web thanks welcome speech for the seminar honourable chief guest respected principal teachers and all my dear friends it gives me a warm welcome for every one present in the interest of the entire school committee

school welcome speech 9 examples format sample - Jun 11 2023

web this speech aims to formally welcome all the students back to school as well as set the tone for the rest of the school days generally a welcome speech is intended to greet the audience inform them want to expect introduce someone or something new and mire importantly to make them audience feel welcomed and comfortable

how to write a welcome speech 11 steps with pictures wikihow - May 10 2023

web jul 29 2023 1 welcome the audience using serious language for a formal occasion pick an appropriate greeting such as good evening ladies and gentlemen then welcome the audience to the event using a phrase such as it is my pleasure to welcome everyone to our beautiful venue tonight 1 keep the tone more serious if it s an important occasion

welcome speech for school exhibition in english for students - Feb 07 2023

web apr 4 2023 thank you short welcome speech for school exhibition 150 words in english good afternoon to everyone present here i warmly welcome all of you on behalf of our school abc public school delhi in the event of its first science exhibition it is our pleasure to have everyone in our inaugural exhibition

welcome speech for school exhibition in english in simple and - Aug 01 2022

web here you would find both short welcome speeches for school exhibitions as well as long welcome speeches for school

exhibitions you can use following school exhibition welcome speech depending upon your requirement and prepare your own good speech for the right occasion and impress your audience

how to write a good welcome speech with a sample speech - Jul 12 2023

web sep 16 2022 write a warm welcome speech for an event step by step it s easy with a template to follow a sample speech and a printable blank outline to use probably the best tagline in the world

2023 samples of welcoming and short opening remarks for - Mar 28 2022

web jan 9 2023 short welcome speech for new students make every new students feel at home in your school with these short welcome speech for new students 1 welcome we are thrilled to have you here with us and are eager to get to know everyone we want you to enjoy yourself and get the most out of your stay here at school university

welcome speech for school and college functions events - Nov 04 2022

web dec 3 2020 in this article we have published some formats and examples of welcome speech for school and college function you can modify these speeches according to various events and chief guests this article includes welcome speech for functions seminars teachers principal webinar executives and trainers

how to start a speech in school competition unifyhighschool - Sep 02 2022

web nov 11 2020 credit frank busch is there one best way to start a speech in school hooking a reader with an intriguing opening sentence is one of the most well known writing strategies professional authors use to get people to continue reading their work the same philosophy applies to speech deliveries

welcome speech for sports day by principal in english vedantu - May 30 2022

web nov 10 2023 good morning everyone i am very happy to see everyone blooming in the spirit of the sports day it is an absolute honor to introduce to you all the chief guests guests mention their names today we feel privileged to host you today i would like to thank you for accepting our invitation and gracing us with your presence

welcome speech samples examples for students in english - Apr 28 2022

web aug 2 2021 welcome speech a welcome speech is a short expression of words which is delivered at the starting of any event meeting gathering celebration or program it is a statement which includes greeting to all the audience special guests participants delegates or whoever is present for the occasion

welcome speech for event for students and children - Mar 08 2023

web read welcome speech for event in 3 minutes here it is my pleasure to present a welcome speech for the event of the annual sports day i believe that everyone present here is doing good and are super excited about today s sports day

welcome speech 10 lines short and long speech schools - Oct 15 2023

web mar 10 2023 10 give a brief overview of the schedule short speech on welcome speech a very warm morning to

everyone who are present here and who are going to make this program a grand success it s my immense pleasure to
welcome speech in english best samples examples tips - Jan 06 2023
web in the case of a welcoming ceremony the welcome speech is considered to be one of the most important parts of the whole gathering in fact it is the most crucial aspect of the entire event this is because the welcome speech serves several purposes first it introduces the guests to the host
welcome speech for an event in english infinity learn - Apr 09 2023
web welcome speech for an event a welcome speech is a great way to set the tone for an event it sets the tone for the event and can make attendees feel more comfortable and welcome additionally a well crafted welcome speech can help to promote the event to those who may not be familiar with it
welcome speech for award ceremony for students and a - Dec 05 2022
web apr 4 2023 these speeches will be useful for the students of schools and colleges teachers and the hosts who deliver a welcome speech for award ceremony in their educational institutes a long welcome speech for award ceremony is helpful to students of classes 7 8 9 10 11 and 12
haulotte optimum 8 operators manual - Jan 26 2022
web haulotte optimum 8 operators manual 36 pages honeywell t6 pro automobile manuals top computer device types laptop manuals network card manuals gps receiver manuals franklin electric subdrive 75 manual isco 750 manual victa pro 550 manual ups polaris xion 850 manual ms9017c manual lenze 8600 user manual
haulotte optimum 8 manuals manualslib - Aug 13 2023
web manuals and user guides for haulotte optimum 8 we have 5 haulotte optimum 8 manuals available for free pdf download maintenance book operator s manual training manual
manuals documentation haulotte australia - Feb 07 2023
web manuals documentation to read and download your haulotte s manuals please go to e technical information com login haulotte manuals password manuals
haulotte optimum 8 1 manuals manualslib - Apr 09 2023
web we have 1 haulotte optimum 8 1 manual available for free pdf download operator s manual haulotte optimum 8 1 operator s manual 140 pages electric scissor lifts brand haulotte category scissor lifts size 6 14 mb table of contents 3 operator s manual 7 after sales service 7 compliance 8 haulotte services
haulotte group optimum 8 manuals manualslib - Jun 11 2023
web manuals and user guides for haulotte group optimum 8 we have 2 haulotte group optimum 8 manuals available for free pdf download maintenance book operating and maintenance instructions manual haulotte group optimum 8 maintenance

book 148 pages brand haulotte group category boom lifts size 10 07 mb table of

electric scissor lifts optimum 8 haulotte singapore - May 30 2022

web haulotte activ screen battery charge hourmeter service alert failures icons in code or in full text pothole guards 2 swing out trays lateral fork lifting pockets 2 front steering and 2 rear driving wheels proportional controls electric or manual break release system tilt sensor lifting and stowage points non marking tyres

new optimum 8 haulotte corporate - Mar 28 2022

web optimum 8 new electric scissor nothing stops it simple robust and reliable the optimum 8 works non stop to meet the requirements of productivity and ease of maintenance and safe working conditions at all times haulotte activ screen provides operators with key information such as alarms troubleshooting as well as battery

haulotte optimum 8 operator s manual pdf download manualslib - Sep 14 2023

web view and download haulotte optimum 8 operator s manual online optimum 8 lifting systems pdf manual download also for optimum 1931 e

haulotte operators manual haulotte optimum 8 by p340 issuu - Nov 04 2022

web feb 6 2018 get haulotte operators manual haulotte optimum 8 pdf file for free from our online library haulotte operators manual haulotte optimum 8 pdf 71 pages 369 91 kb 03

haulotte optimum 8 training manual pdf download manualslib - May 10 2023

web view and download haulotte optimum 8 training manual online optimum 8 lifting systems pdf manual download also for optimum 1931 e

haulotte optimum 8 maintenance book pdf download manualslib - Jul 12 2023

web view and download haulotte optimum 8 maintenance book online optimum 8 construction equipment pdf manual download also for optimum 1931 e

haulotte scissor lift optimum 8 1931e operators manual - Jun 30 2022

web aug 23 2020 haulotte scissor lift optimum 8 1931e operators manual size 68 7 mb format pdf language english german brand haulotte type of machine scissor lift type of document operators manual model haulotte scissor lift optimum 8 optimum 1931 e content haulotte scissor lift optimum 8 1931e operators

haulotte scissor lift optimum 8 1931e operators manual - Oct 03 2022

web description haulotte scissor lift optimum 8 1931e operators manual size 68 7 mb format pdf language english german brand haulotte type of machine scissor lift type of document operators manual model haulotte scissor lift optimum 8 optimum 1931 e content haulotte scissor lift optimum 8 1931e operators

haulotte scissor lift optimum 8 1931e operator s manual - Aug 01 2022

web mar 29 2023 haulotte scissor lift optimum 8 1931e operator s manual size 32 4 mb format pdf language english brand haulotte type of machine scissor lift type of

haulotte group optimum 8 maintenance book manualslib - Dec 05 2022

web view and download haulotte group optimum 8 maintenance book online optimum 8 boom lifts pdf manual download also for optimum 1931 e

haulotte optimum 8 operator s manual guidessimo com - Apr 28 2022

web manufacturer haulotte category of device construction equipment lifting systems document optimum 8 operator s manual file type pdf updated 18 04 2023 count of pages 124 download optimum 8 manual 124 pages

optimum 8 haulotte pdf catalogs directindustry - Feb 24 2022

web oct 12 2014 electric scissor lifts best driving and lifting experience ac powered high precision driving proportional and quick movements best turning radius utmost versatility ability to go through standard doorways mobile potholes protection indoor outdoor rated minimal maintenance and downtime

haulotte scissor lift optimum 8 1931e operators manual - Sep 02 2022

web type of document operators manual model haulotte scissor lift optimum 8 optimum 1931 e content haulotte scissor lift optimum 8 1931e operators manual 4001058440 de haulotte scissor lift optimum 8 1931e operators manual 4001058450 en haulotte scissor lift optimum 8 1931e operators

haulotte optimum 8 operators manual canadian instructions - Jan 06 2023

web jul 15 2023 haulotte operators manual haulotte optimum 8 pdf operators manual pdf 3 71 haulotte h15sx download haulotte manual h15sx pdf download cbse class 12 english haulotte optimum 6 until 2004 haulotte h15sdx

haulotte optimum 8 repair manual 2005 pdf pdf wound - Mar 08 2023

web this manual gives the information required for you to perform servicing and repair operations on certain pieces of equipment yourself during and after the guarantee period our after sales service is available to perform any servicing operations you may require