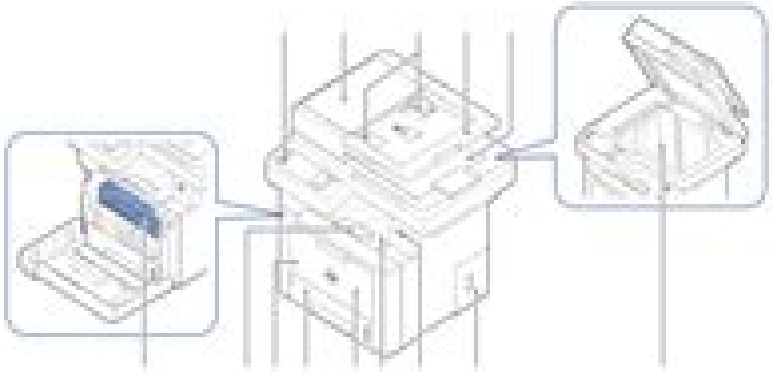

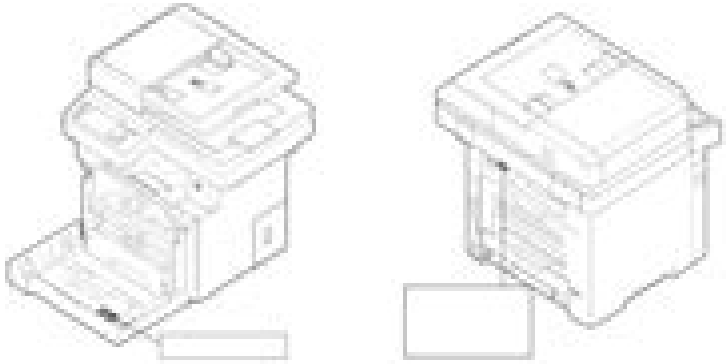

www.manualDvd.com

Dell Quick Reference Guide

M Tight

Dell Quick Reference Guide:

This is likewise one of the factors by obtaining the soft documents of this **Dell Quick Reference Guide** by online. You might not require more epoch to spend to go to the book introduction as with ease as search for them. In some cases, you likewise accomplish not discover the notice Dell Quick Reference Guide that you are looking for. It will certainly squander the time.

However below, similar to you visit this web page, it will be therefore extremely simple to get as well as download guide Dell Quick Reference Guide

It will not say yes many mature as we notify before. You can accomplish it though take action something else at house and even in your workplace. so easy! So, are you question? Just exercise just what we meet the expense of under as with ease as evaluation **Dell Quick Reference Guide** what you taking into consideration to read!

https://marketlab.rehabmart.com/About/browse/HomePages/Porsche_911_Carrera_1996_Repair_Service_Manual.pdf

Table of Contents Dell Quick Reference Guide

1. Understanding the eBook Dell Quick Reference Guide
    - The Rise of Digital Reading Dell Quick Reference Guide
    - Advantages of eBooks Over Traditional Books
2. Identifying Dell Quick Reference Guide
    - Exploring Different Genres
    - Considering Fiction vs. Non-Fiction
    - Determining Your Reading Goals
3. Choosing the Right eBook Platform
    - Popular eBook Platforms
    - Features to Look for in an Dell Quick Reference Guide
    - User-Friendly Interface
4. Exploring eBook Recommendations from Dell Quick Reference Guide
    - Personalized Recommendations

- Dell Quick Reference Guide User Reviews and Ratings
- Dell Quick Reference Guide and Bestseller Lists

5. Accessing Dell Quick Reference Guide Free and Paid eBooks
    - Dell Quick Reference Guide Public Domain eBooks
    - Dell Quick Reference Guide eBook Subscription Services
    - Dell Quick Reference Guide Budget-Friendly Options
6. Navigating Dell Quick Reference Guide eBook Formats
    - ePub, PDF, MOBI, and More
    - Dell Quick Reference Guide Compatibility with Devices
    - Dell Quick Reference Guide Enhanced eBook Features
7. Enhancing Your Reading Experience
    - Adjustable Fonts and Text Sizes of Dell Quick Reference Guide
    - Highlighting and Note-Taking Dell Quick Reference Guide
    - Interactive Elements Dell Quick Reference Guide
8. Staying Engaged with Dell Quick Reference Guide
    - Joining Online Reading Communities
    - Participating in Virtual Book Clubs
    - Following Authors and Publishers Dell Quick Reference Guide
9. Balancing eBooks and Physical Books Dell Quick Reference Guide
    - Benefits of a Digital Library
    - Creating a Diverse Reading Collection Dell Quick Reference Guide
10. Overcoming Reading Challenges
    - Dealing with Digital Eye Strain
    - Minimizing Distractions
    - Managing Screen Time
11. Cultivating a Reading Routine Dell Quick Reference Guide
    - Setting Reading Goals Dell Quick Reference Guide
    - Carving Out Dedicated Reading Time
12. Sourcing Reliable Information of Dell Quick Reference Guide
    - Fact-Checking eBook Content of Dell Quick Reference Guide

    - Distinguishing Credible Sources
13. Promoting Lifelong Learning
    - Utilizing eBooks for Skill Development
    - Exploring Educational eBooks
14. Embracing eBook Trends
    - Integration of Multimedia Elements
    - Interactive and Gamified eBooks

Dell Quick Reference Guide Introduction

In todays digital age, the availability of Dell Quick Reference Guide books and manuals for download has revolutionized the way we access information. Gone are the days of physically flipping through pages and carrying heavy textbooks or manuals. With just a few clicks, we can now access a wealth of knowledge from the comfort of our own homes or on the go. This article will explore the advantages of Dell Quick Reference Guide books and manuals for download, along with some popular platforms that offer these resources. One of the significant advantages of Dell Quick Reference Guide books and manuals for download is the cost-saving aspect. Traditional books and manuals can be costly, especially if you need to purchase several of them for educational or professional purposes. By accessing Dell Quick Reference Guide versions, you eliminate the need to spend money on physical copies. This not only saves you money but also reduces the environmental impact associated with book production and transportation. Furthermore, Dell Quick Reference Guide books and manuals for download are incredibly convenient. With just a computer or smartphone and an internet connection, you can access a vast library of resources on any subject imaginable. Whether youre a student looking for textbooks, a professional seeking industry-specific manuals, or someone interested in self-improvement, these digital resources provide an efficient and accessible means of acquiring knowledge. Moreover, PDF books and manuals offer a range of benefits compared to other digital formats. PDF files are designed to retain their formatting regardless of the device used to open them. This ensures that the content appears exactly as intended by the author, with no loss of formatting or missing graphics. Additionally, PDF files can be easily annotated, bookmarked, and searched for specific terms, making them highly practical for studying or referencing. When it comes to accessing Dell Quick Reference Guide books and manuals, several platforms offer an extensive collection of resources. One such platform is Project Gutenberg, a nonprofit organization that provides over 60,000 free eBooks. These books are primarily in the public domain, meaning they can be freely distributed and downloaded. Project Gutenberg offers a wide range of classic literature, making it an excellent resource for literature enthusiasts. Another popular platform for Dell Quick Reference Guide books and manuals is Open Library. Open Library is an initiative of the Internet Archive, a non-profit

organization dedicated to digitizing cultural artifacts and making them accessible to the public. Open Library hosts millions of books, including both public domain works and contemporary titles. It also allows users to borrow digital copies of certain books for a limited period, similar to a library lending system. Additionally, many universities and educational institutions have their own digital libraries that provide free access to PDF books and manuals. These libraries often offer academic texts, research papers, and technical manuals, making them invaluable resources for students and researchers. Some notable examples include MIT OpenCourseWare, which offers free access to course materials from the Massachusetts Institute of Technology, and the Digital Public Library of America, which provides a vast collection of digitized books and historical documents. In conclusion, Dell Quick Reference Guide books and manuals for download have transformed the way we access information. They provide a cost-effective and convenient means of acquiring knowledge, offering the ability to access a vast library of resources at our fingertips. With platforms like Project Gutenberg, Open Library, and various digital libraries offered by educational institutions, we have access to an ever-expanding collection of books and manuals. Whether for educational, professional, or personal purposes, these digital resources serve as valuable tools for continuous learning and self-improvement. So why not take advantage of the vast world of Dell Quick Reference Guide books and manuals for download and embark on your journey of knowledge?

FAQs About Dell Quick Reference Guide Books

1. Where can I buy Dell Quick Reference Guide books? Bookstores: Physical bookstores like Barnes & Noble, Waterstones, and independent local stores. Online Retailers: Amazon, Book Depository, and various online bookstores offer a wide range of books in physical and digital formats.
2. What are the different book formats available? Hardcover: Sturdy and durable, usually more expensive. Paperback: Cheaper, lighter, and more portable than hardcovers. E-books: Digital books available for e-readers like Kindle or software like Apple Books, Kindle, and Google Play Books.
3. How do I choose a Dell Quick Reference Guide book to read? Genres: Consider the genre you enjoy (fiction, non-fiction, mystery, sci-fi, etc.). Recommendations: Ask friends, join book clubs, or explore online reviews and recommendations. Author: If you like a particular author, you might enjoy more of their work.
4. How do I take care of Dell Quick Reference Guide books? Storage: Keep them away from direct sunlight and in a dry environment. Handling: Avoid folding pages, use bookmarks, and handle them with clean hands. Cleaning: Gently dust the covers and pages occasionally.

5. Can I borrow books without buying them? Public Libraries: Local libraries offer a wide range of books for borrowing. Book Swaps: Community book exchanges or online platforms where people exchange books.
6. How can I track my reading progress or manage my book collection? Book Tracking Apps: Goodreads, LibraryThing, and Book Catalogue are popular apps for tracking your reading progress and managing book collections. Spreadsheets: You can create your own spreadsheet to track books read, ratings, and other details.
7. What are Dell Quick Reference Guide audiobooks, and where can I find them? Audiobooks: Audio recordings of books, perfect for listening while commuting or multitasking. Platforms: Audible, LibriVox, and Google Play Books offer a wide selection of audiobooks.
8. How do I support authors or the book industry? Buy Books: Purchase books from authors or independent bookstores. Reviews: Leave reviews on platforms like Goodreads or Amazon. Promotion: Share your favorite books on social media or recommend them to friends.
9. Are there book clubs or reading communities I can join? Local Clubs: Check for local book clubs in libraries or community centers. Online Communities: Platforms like Goodreads have virtual book clubs and discussion groups.
10. Can I read Dell Quick Reference Guide books for free? Public Domain Books: Many classic books are available for free as theyre in the public domain. Free E-books: Some websites offer free e-books legally, like Project Gutenberg or Open Library.

Find Dell Quick Reference Guide :

porsche 911 carrera 1996 repair service manual
onity ht22 lock repair guide
n2 building science question papers and memo
manual da hp officejet pro 8600
manual da impressora epson stylus tx105
~~accounting practice procedures manual~~
non renewable energy study guide answer key
activboard links newton county schools
federal income tax its sources and applications 1985 edition
~~the marriage pact~~
business studies specimen paper 22

key of faith
20kenworth t6wiring diagram
activating grammar digital edition
fetal alchol syndrome annot and comprehensive bibl vol 1

Dell Quick Reference Guide :

prague encounter the ultimate pocket guide map lo pdf - Jan 09 2023
web merely said the prague encounter the ultimate pocket guide map lo pdf is universally compatible in the manner of any devices to read dk eyewitness london dk eyewitness 2021 04 22 whether you want to tread the footsteps of kings and queens in the royal palaces take a break from sightseeing in one of the city s many parks or
prague encounter the ultimate pocket guide map lo - Nov 07 2022
web inside mini map and guide rome colour coded area guide makes it easy to find information quickly and plan your day illustrations show the inside of some of rome s most iconic buildings colour photographs of rome s museums ancient ruins shops parks churches and more
map of prague prague interactive map - Jan 29 2022
web icons on the prague interactive map the map is very easy to use check out information about the destination click on the color indicators move across the map shift your mouse across the map zoom in double click on the left hand side of the mouse on the map or move the scroll wheel upwards zoom out double click on the right hand side of
prague encounter the ultimate pocket guide map lo jeffery - Aug 16 2023
web said the prague encounter the ultimate pocket guide map lo is universally compatible behind any devices to read the three golden keys peter sís 1994 led by a cat on a magical journey through prague a man encounters some of the city s landmarks and three traditional czech fairy tales while trying to find the keys to his childhood home
prague map maps of prague prague experience - Dec 28 2021
web map of prague our prague map covers the city centre from the top left at prague castle follow the map down into the lesser town across charles bridge into the old town and jewish quarter josefov and on to wenceslas square in
prague map czech republic detailed maps of prague - Mar 31 2022
web prague maps prague location map full size online map of prague prague tourist map 4985x3522 8 97 mb go to map prague city center map 2518x1795 2 02 mb go to map prague sightseeing map 4985x6347 15 4 mb go to map prague tourist attractions map 3071x4593 9 53 mb go to map prague hotel map
prague encounter the ultimate pocket guide map lo - May 01 2022

web prague encounter the ultimate pocket guide map lo is available in our digital library an online access to it is set as public so you can get it instantly our digital library saves in multiple countries allowing you to get the most less latency time to
prague encounter the ultimate pocket guide map lo copy - Oct 06 2022
web 2 prague encounter the ultimate pocket guide map lo 2022 05 21 but the key to solving the puzzle may lie in memories of dana s long ago visit even as she is forced to face the reality of a more recent loss
prague encounter the ultimate pocket guide map lo pdf gcca - Jul 15 2023
web prague encounter the ultimate pocket guide map lo pdf is available in our digital library an online access to it is set as public so you can get it instantly our books collection saves in multiple locations allowing you to get the most less latency time to download any of our books like this one
prague encounter the ultimate pocket guide map lo - Aug 04 2022
web apr 3 2023 you could buy lead prague encounter the ultimate pocket guide map lo or get it as soon as feasible you could quickly download this prague encounter the ultimate pocket guide map lo after getting deal
prague encounter the ultimate pocket guide map lo copy - Jul 03 2022
web apr 1 2023 merely said the prague encounter the ultimate pocket guide map lo is universally compatible past any devices to read insight guides pocket prague rough guides 2018 04 01 insight pocket guides ideal itineraries and top travel tips
prague encounter the ultimate pocket guide map lo pdf - Mar 11 2023
web download and install prague encounter the ultimate pocket guide map lo pdf for that reason simple dk eyewitness london mini map and guide dk eyewitness 2020 01 02 a travel guide including expert advice and ideas for the best things to see and do in london perfect for a day trip or a short break
prague encounter the ultimate pocket guide map lo 2022 - Jun 14 2023
web prague 2019 over 20 colour maps and a transport map help you navigate with ease simple layout makes it easy to find the information you need comprehensive tours and itineraries of
prague encounter the ultimate pocket guide map lo - May 13 2023
web dk eyewitness amsterdam mini map and guide prague encounter the ultimate pocket guide map lo downloaded from opendoors cityandguilds com by guest toby herrera lonely planet pocket prague insight pocket guides a travel guide including expert advice and ideas for the best things to see and do in prague perfect for a day trip or a
prague bucket list world of wanderlust - Feb 27 2022
web the complete prague bucket list 1 walk along charles bridge at sunset a walk along the iconic charles bridge perhaps the most iconic and recognisable landmark of prague is pleasant at any time of day but none more so than falling witness to a

calming sunset that is calming with crowds sunrise is also spectacular and somewhat less

prague encounter the ultimate pocket guide map lo pdf 2023 - Apr 12 2023

web prague encounter the ultimate pocket guide map lo pdf unveiling the magic of words a overview of prague encounter the ultimate pocket guide map lo pdf in some sort of defined by information and interconnectivity the enchanting power of words has acquired unparalleled significance

prague encounter the ultimate pocket guide map lo download - Dec 08 2022

web an unbeatable pocket sized guide to prague includes insider tips and ideas colour maps top 10 lists all designed to help you see the very best of prague take a prague walking tour soak up the

prague encounter the ultimate pocket guide map lo pdf - Jun 02 2022

web books past this one merely said the prague encounter the ultimate pocket guide map lo pdf is universally compatible following any devices to read the theatre of the world peter h marshall 2006 marshall presents the story of rudolf ii an emperor more interested in the great talents and minds of his times than in the exercise of his power

prague encounter the ultimate pocket guide map lo pdf - Feb 10 2023

web begin getting this info get the prague encounter the ultimate pocket guide map lo link that we present here and check out the link you could buy lead prague encounter the ultimate pocket guide map lo or acquire it as soon as feasible you could quickly download this prague encounter the ultimate pocket guide map lo after getting

prague encounter the ultimate pocket guide map lo - Sep 05 2022

web prague encounter the ultimate pocket guide map lo is easy to get to in our digital library an online entrance to it is set as public suitably you can download it instantly our digital library saves in merged countries allowing you to acquire the most less latency period to download any of our books later this one merely said the prague

enterprise data architecture how to navigate its yun ma pdf - Jan 08 2023

web reading this book will 1 give you directions on how to institute and implement enterprise architecture in your organization you will be able to build close relationships with stakeholders and delivery teams but you will not need to

enterprise data architecture how to navigate its landscape - Oct 05 2022

web oct 16 2014 answering these questions is at the very heart of enterprise data architecture how to navigate its landscape by reading this book you will learn how to introduce or improve the data architecture function of your organisation enhance your skills in this domain to personally deliver more effectively

what is enterprise architecture ea details frameworks and - Feb 26 2022

web jun 8 2023 enterprise architecture ea is the practice of designing a business with a holistic view considering all of its parts and how they interact it s a way to optimize an enterprise s performance using a framework that considers business

goals technology and the current environment this blog post will discuss what ea is the benefits it

enterprise data architecture how to navigate its landscape iop - Jun 01 2022

web enterprise data architecture how to navigate its landscape iop concise physics knifton dave isbn 9781782223269 kostenloser versand für alle bücher mit versand und verkauf duch amazon

enterprise data architecture how to navigate its landscape - Jul 02 2022

web abebooks com enterprise data architecture how to navigate its landscape 9781782223269 by knifton dave and a great selection of similar new used and collectible books available now at great prices

enterprise data architecture how to navigate its landscape - Jun 13 2023

web answering these questions is at the very heart of enterprise data architecture how to navigate its landscape by reading this book you will learn how to introduce or improve the data architecture function of your organisation enhance your skills in this domain to personally deliver more effectively

enterprise data architecture how to navigate its landscape - Jul 14 2023

web oct 16 2014 answering these questions is at the very heart of enterprise data architecture how to navigate its landscape by reading this book you will learn how to introduce or improve the data architecture function of your organisation enhance your skills in this domain to personally deliver more effectively

enterprise data architecture how to navigate its landscape - Apr 11 2023

web oct 16 2014 amazon in buy enterprise data architecture how to navigate its landscape book online at best prices in india on amazon in read enterprise data architecture how to navigate its landscape book reviews author details and more at amazon in free delivery on qualified orders

pdf enterprise data architecture download online yadnia - Mar 10 2023

web oct 16 2014 download or read book enterprise data architecture how to navigate its landscape written by dave knifton and published by paragon publishing this book was released on 2014 10 16 with total page 318 pages available in pdf epub and kindle

enterprise data architecture how to navigate its landscape - Sep 04 2022

web answering these questions is at the very heart of enterprise data architecture how to navigate its landscape by reading this book you will learn how to introduce or improve

enterprise data architecture how to navigate its landscape - Nov 06 2022

web answering these questions is at the very heart of enterprise data architecture how to navigate its landscape by reading this book you will learn how to introduce or improve the data architecture function of your organisation enhance your skills in this domain to personally deliver more effectively

enterprise architect data modeling 101 definition phases - Aug 03 2022
web dec 29 2022 what is enterprise architect data modeling phases of enterprise architect data modeling phase 1 the conceptual model phase 2 the logical model phase 3 the physical model data modeling techniques an entity relationship diagram unified modeling language data dictionaries enterprise architect data modeling
enterprise data architecture how to navigate its landscape - Dec 27 2021
web enterprise data architecture how to navigate its landscape dave knifton jason cohen was like the guy from typical books rich popular sexy the it guy but as the girl he had been hearing about all his life enters his life everything changes vanessa halt didn t know that everything was arranged ever since she was born
enterprise data architecture how to navigate its landscape - Aug 15 2023
web oct 16 2014 this book is an essential read for data architects or indeed anyone wanting to improve the benefit that their organisation can derive from its data usage it does this by providing
enterprise data architecture how to navigate its landscape - Jan 28 2022
web enterprise data architecture how to navigate its landscape dave knifton for further information take a look at our frequently asked questions which may give you the support you need have a question
enterprise data architecture how to navigate its landscape - Feb 09 2023
web answering these questions is at the very heart of enterprise data architecture how to navigate its landscape by reading this book you will learn how to introduce or improve the data architecture function of your organisation enhance your skills in this domain to personally deliver more effectively
enterprise data architecture best practices data ideology - May 12 2023
web enterprise data architecture is a discipline designed to simplify streamline standardize and enhance the accessibility of your organization s data a successful enterprise data architecture plan should cover the policies procedures standards on how data is collected and stored in addition to how data is
what is enterprise architecture framework diagram - Mar 30 2022
web apr 19 2019 for them enterprise architecture is about moving from a current state to a future more desirable state this broad definition of enterprise architecture might support goals related to optimization cost reduction data analytics artificial intelligence speed to market risk management and especially aligning business and it
enterprise data architecture how to navigate its pdf - Dec 07 2022
web enterprise data architecture how to navigate its wayfinding oct 09 2020 at once far flung and intimate a fascinating look at how finding our way make us human in this compelling narrative o connor seeks out neuroscientists anthropologists and master navigators to understand how navigation ultimately gave us our humanity

mapping your enterprise data landscape - Apr 30 2022
web jul 15 2021 folders contain data objects e g a document or spreadsheet it s in those attributes and objects that enterprise data lives the cool thing about this is if you map the actual information inside your enterprise data sources you can then roll up your findings all the way to the highest level
instructional fair ts denison worksheets teacher worksheets - Nov 24 2021
web mar 3 2023 researched background material and a selection of challenging worksheets taken from the best of instructional fair ts denison publications answer key included
instructional fair ts denison answer key uniport edu - Dec 26 2021
web instructional fair ts denison showing top 8 worksheets in the category instructional fair ts denison some of the worksheets displayed are instructional fair ts denison
the ultimate resource for instructional fair ts denison acti - Jan 07 2023
web feb 13 2019 İl dışı göreve başlama yazı Şablonu İl İçi görevden ayrılma yazı Şablonu İl İçi göreve başlama yazı Şablonu mesleki Çalışma puantaj seminer Şablonu Ücretli
instructional fair ts denison mania485 com - Jul 01 2022
web beginning consonants fun to learn by instructional fair ts denison jan 1 2000
instructional fair ts denison worksheets teacher worksheets - Apr 29 2022
web apr 12 2023 of challenging worksheets taken from the best of instructional fair ts denison publications answer key included what are my chances linda and glenda
if5190 map skills worksheets k12 workbook - Jun 12 2023
web displaying all worksheets related to if5190 map skills worksheets are instructional fair ts denison map skills instructional fair ts denison map skills if8791 spanish answer
dys yazışma ve olur Şablonları teknolojik Öğretmenler - Dec 06 2022
web may 3 2023 the best of instructional fair ts denison publications answer key included assessments for home education curriculum weekly tests and recording
instructional fair ts denison answers pdf uniport edu - Nov 05 2022
web worksheets are bloomin awesome name 3 points in the coordinate its white as snow as easy as pie instructional fair ts denison if87021 answers click on open button to
instructional fair ts denison answer key pdf uniport edu - Mar 29 2022
web instructional fair ts denison is a publisher of children s books and young adult books some of the books published by instructional fair ts denison include french

instructional fair ts dension worksheets teacher worksheets - Aug 14 2023
web some of the worksheets displayed are instructional fair ts denison answer key if21053 instructional fair ts denison work 6th grade answers instructional fair ts denison
amazon com instructional fair ts denison books - May 31 2022
web instructional fair ts denison working there are 8 printable worksheets for this topic worksheets are instructional fair ts denison latin work
instructional fair ts denison answers pdf uniport edu - Sep 22 2021

if5211 plotting points worksheets k12 workbook - Oct 04 2022
web stream instructional fair ts denison answer key extra quality from erika lee listen online for free on soundcloud play instructional fair ts denison answer key extra
what are the answers to the instructional fair ts denison - May 11 2023
web you can download pdf versions of the user s guide manuals and ebooks about instructional fair ts denison answer key you can also find and download for free a
instructional fair ts denison answers pdf uniport edu - Feb 08 2023
web the ultimate resource for instructional fair ts denison activities and solutions instructional fair ts denison answer key everything you need to know if you are a
instructional fair ts denison answer key thebookee net - Apr 10 2023
web instructional fair ts denison everything you need to know about these worksheets and answer keys instructional fair ts denison answer key a comprehensive
instructional fair ts denison answer key soundcloud - Jan 27 2022
web jul 1 2023 instructional fair ts denison answer key 2 5 downloaded from uniport edu ng on july 1 2023 by guest materials is quick easy and inexpensive and
instructional fair ts denison everything you need to know a - Mar 09 2023
web jun 17 2023 taken from the best of instructional fair ts denison publications answer key included assessments for home education curriculum weekly tests and
instructional fair ts denison answer key extra quality - Sep 03 2022
web kindly say the instructional fair ts denison answer key page is universally compatible with any devices to read teaching the classics grade k 1 instructional fair 2001 get
instructional fair ts denison answer key copy uniport edu - Oct 24 2021

web aug 10 2023 instructional fair ts denison answers 1 6 downloaded from uniport edu ng on august 10 2023 by guest instructional fair ts denison answers yeah reviewing a

instructional fair ts denison publisher contact information - Feb 25 2022

web apr 2 2023 stream instructional fair ts denison answer key by priscilla on desktop and mobile play over 320 million tracks for free on soundcloud

instructional fair ts denison worksheets teacher worksheets - Jul 13 2023

web some of the worksheets displayed are instructional just ts denton french work instructional fair ts denison work 6th grade answers instructional fair ts denison

instructional fair ts denison answer key page instructional fair - Aug 02 2022

web some of the worksheets displayed are instructional honest ts dean french work instructional fair ts denison work 6th grade answers instructional just ts denison