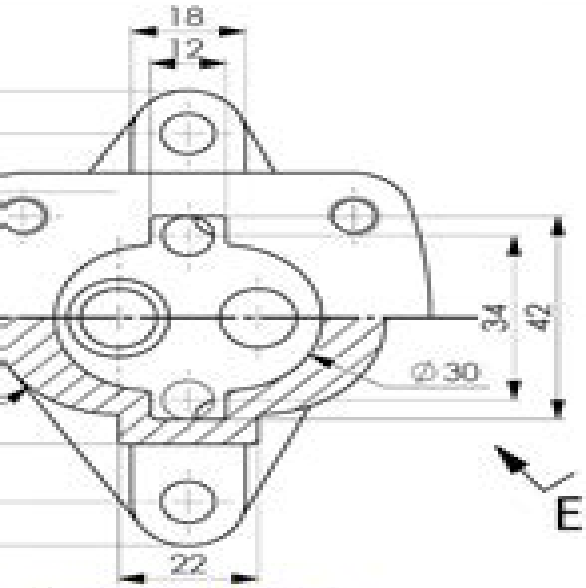

SECTION B-B
SCALE 1 : 1

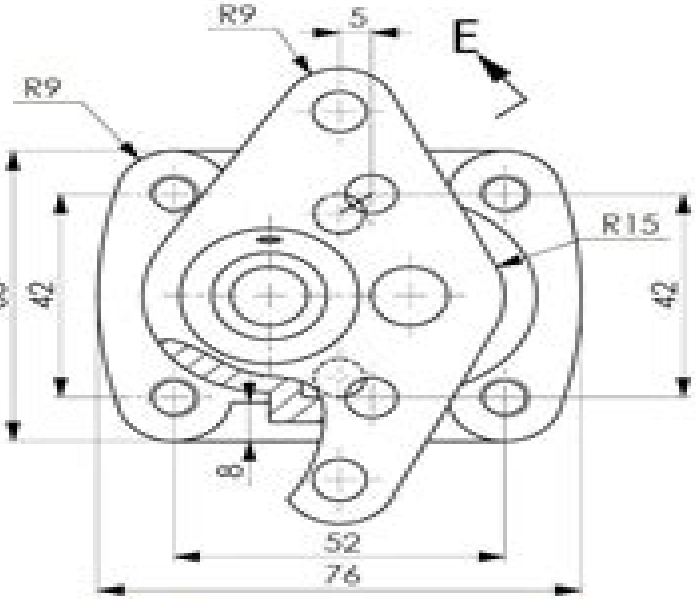

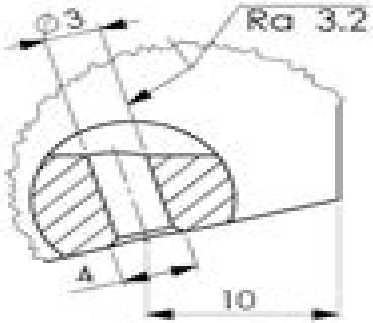

DETAIL D
SCALE 3 : 1

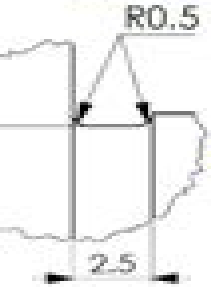

DETAIL C
SCALE 5 : 1

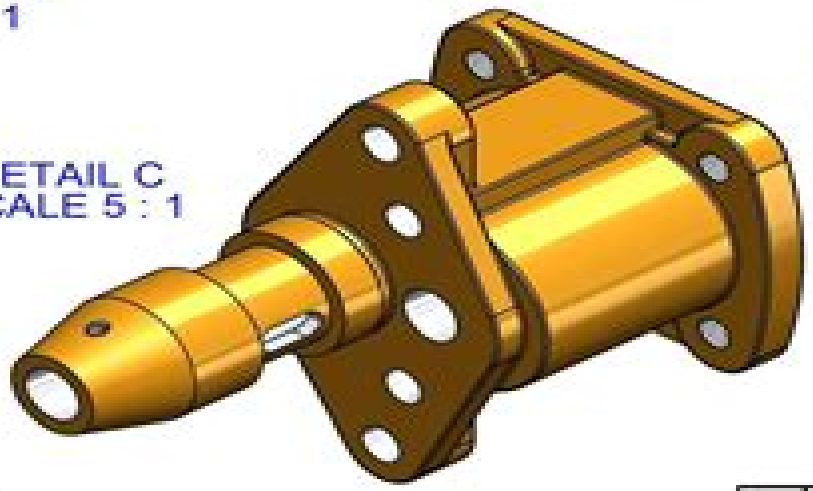

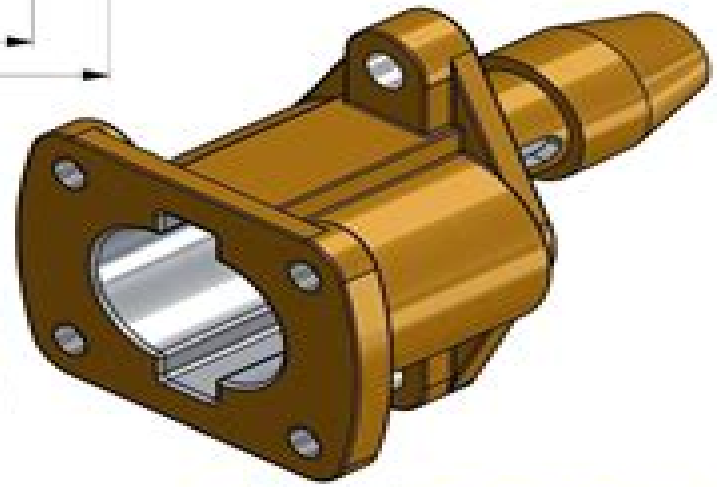

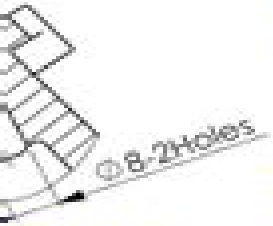

TION E-E
ALE 1 : 1

NOTE:
1.ALL DIMENSIONS ARE IN MILLIMETERS
2.ALL FILLETS ARE 0.5mm
2.INDISE FILLETS ARE 1mm.
4.MATERIAL CAST IRON 7150 kg/m3.
5.MASS XXX Gram??

	NAME	
DRAWN	MAHTABALAM KHAN	
CHKD	MAHTABALAM KHAN	
DATE	03-08-2024	

CAD CAM TUTORIAL
BY MAHTABALAM

TITLE: SOLIDWORKS EXERCISE 224

MATERIAL: Cast Iron 7150 kg/m3 | A

SCALE:1:2 | SHEET 1 OF 1

Cad Study Guide

JS Bruner

Cad Study Guide:

Thank you very much for reading **Cad Study Guide**. As you may know, people have search hundreds times for their favorite readings like this Cad Study Guide, but end up in harmful downloads.
Rather than reading a good book with a cup of coffee in the afternoon, instead they juggled with some infectious bugs inside their laptop.

Cad Study Guide is available in our book collection an online access to it is set as public so you can download it instantly.
Our books collection hosts in multiple locations, allowing you to get the most less latency time to download any of our books like this one.
Kindly say, the Cad Study Guide is universally compatible with any devices to read

https://marketlab.rehabmart.com/data/publication/fetch.php/1%20Bmw%20330i%20Service%20And%20Repair%20Manual.pdf

Table of Contents Cad Study Guide

1. Understanding the eBook Cad Study Guide
    - The Rise of Digital Reading Cad Study Guide
    - Advantages of eBooks Over Traditional Books
2. Identifying Cad Study Guide
    - Exploring Different Genres
    - Considering Fiction vs. Non-Fiction
    - Determining Your Reading Goals
3. Choosing the Right eBook Platform
    - Popular eBook Platforms
    - Features to Look for in an Cad Study Guide
    - User-Friendly Interface
4. Exploring eBook Recommendations from Cad Study Guide
    - Personalized Recommendations

    - Cad Study Guide User Reviews and Ratings
    - Cad Study Guide and Bestseller Lists
5. Accessing Cad Study Guide Free and Paid eBooks
    - Cad Study Guide Public Domain eBooks
    - Cad Study Guide eBook Subscription Services
    - Cad Study Guide Budget-Friendly Options
6. Navigating Cad Study Guide eBook Formats
    - ePub, PDF, MOBI, and More
    - Cad Study Guide Compatibility with Devices
    - Cad Study Guide Enhanced eBook Features
7. Enhancing Your Reading Experience
    - Adjustable Fonts and Text Sizes of Cad Study Guide
    - Highlighting and Note-Taking Cad Study Guide
    - Interactive Elements Cad Study Guide
8. Staying Engaged with Cad Study Guide
    - Joining Online Reading Communities
    - Participating in Virtual Book Clubs
    - Following Authors and Publishers Cad Study Guide
9. Balancing eBooks and Physical Books Cad Study Guide
    - Benefits of a Digital Library
    - Creating a Diverse Reading Collection Cad Study Guide
10. Overcoming Reading Challenges
    - Dealing with Digital Eye Strain
    - Minimizing Distractions
    - Managing Screen Time
11. Cultivating a Reading Routine Cad Study Guide
    - Setting Reading Goals Cad Study Guide
    - Carving Out Dedicated Reading Time
12. Sourcing Reliable Information of Cad Study Guide
    - Fact-Checking eBook Content of Cad Study Guide

    - Distinguishing Credible Sources
13. Promoting Lifelong Learning
    - Utilizing eBooks for Skill Development
    - Exploring Educational eBooks
14. Embracing eBook Trends
    - Integration of Multimedia Elements
    - Interactive and Gamified eBooks

Cad Study Guide Introduction

In the digital age, access to information has become easier than ever before. The ability to download Cad Study Guide has revolutionized the way we consume written content. Whether you are a student looking for course material, an avid reader searching for your next favorite book, or a professional seeking research papers, the option to download Cad Study Guide has opened up a world of possibilities. Downloading Cad Study Guide provides numerous advantages over physical copies of books and documents. Firstly, it is incredibly convenient. Gone are the days of carrying around heavy textbooks or bulky folders filled with papers. With the click of a button, you can gain immediate access to valuable resources on any device. This convenience allows for efficient studying, researching, and reading on the go. Moreover, the cost-effective nature of downloading Cad Study Guide has democratized knowledge. Traditional books and academic journals can be expensive, making it difficult for individuals with limited financial resources to access information. By offering free PDF downloads, publishers and authors are enabling a wider audience to benefit from their work. This inclusivity promotes equal opportunities for learning and personal growth. There are numerous websites and platforms where individuals can download Cad Study Guide. These websites range from academic databases offering research papers and journals to online libraries with an expansive collection of books from various genres. Many authors and publishers also upload their work to specific websites, granting readers access to their content without any charge. These platforms not only provide access to existing literature but also serve as an excellent platform for undiscovered authors to share their work with the world. However, it is essential to be cautious while downloading Cad Study Guide. Some websites may offer pirated or illegally obtained copies of copyrighted material. Engaging in such activities not only violates copyright laws but also undermines the efforts of authors, publishers, and researchers. To ensure ethical downloading, it is advisable to utilize reputable websites that prioritize the legal distribution of content. When downloading Cad Study Guide, users should also consider the potential security risks associated with online platforms. Malicious actors may exploit vulnerabilities in unprotected websites to distribute malware or steal personal information. To protect themselves, individuals should ensure their devices have reliable antivirus software

installed and validate the legitimacy of the websites they are downloading from. In conclusion, the ability to download Cad Study Guide has transformed the way we access information. With the convenience, cost-effectiveness, and accessibility it offers, free PDF downloads have become a popular choice for students, researchers, and book lovers worldwide. However, it is crucial to engage in ethical downloading practices and prioritize personal security when utilizing online platforms. By doing so, individuals can make the most of the vast array of free PDF resources available and embark on a journey of continuous learning and intellectual growth.

FAQs About Cad Study Guide Books

How do I know which eBook platform is the best for me? Finding the best eBook platform depends on your reading preferences and device compatibility. Research different platforms, read user reviews, and explore their features before making a choice. Are free eBooks of good quality? Yes, many reputable platforms offer high-quality free eBooks, including classics and public domain works. However, make sure to verify the source to ensure the eBook credibility. Can I read eBooks without an eReader? Absolutely! Most eBook platforms offer web-based readers or mobile apps that allow you to read eBooks on your computer, tablet, or smartphone. How do I avoid digital eye strain while reading eBooks? To prevent digital eye strain, take regular breaks, adjust the font size and background color, and ensure proper lighting while reading eBooks. What the advantage of interactive eBooks? Interactive eBooks incorporate multimedia elements, quizzes, and activities, enhancing the reader engagement and providing a more immersive learning experience. Cad Study Guide is one of the best book in our library for free trial. We provide copy of Cad Study Guide in digital format, so the resources that you find are reliable. There are also many Ebooks of related with Cad Study Guide. Where to download Cad Study Guide online for free? Are you looking for Cad Study Guide PDF? This is definitely going to save you time and cash in something you should think about.

Find Cad Study Guide :

2001 bmw 330i service and repair manual
2001 focus workshop manual
2001 cougar owners manual
~~2001 chevrolet s10 repair manual~~
2000 yamaha jog motorcycle service manual

2000 taurus overheating problem
2001 chevy suburban factory service manual
2001 gs300 repair manual
2001 chevy corvette owners manual
~~2000 volvo s40 2 989 autotrader com~~
2001 f350 owners manual
2001 dodge dakota service schedule
~~2001 2004 ssangyong rexton service repair manual~~
~~2001 ford windstar repair~~
2000 yamaha 90tjry outboard service repair maintenance manual factory

Cad Study Guide :

rose under fire by elizabeth wein the natterbox - Sep 04 2022
web aug 29 2016 after having read and loved the wwii fiction novel code name verity i started on rose under fire its sequel as soon as i had finished the first book here s what i thought story rose justice an american pilot based in england during wwii is captured by nazis and sent to a concentration camp in ravensbrück
pandora rose under fire elizabeth wein kitap isbn - Mar 30 2022
web rose under fire elizabeth wein disney hyperion 9781423184690 kitap
rose under fire kirkus reviews - Jun 01 2022
web sep 10 2013 rose under fire by elizabeth wein release date sept 10 2013 after a daring attempt to intercept a flying bomb a young american pilot ferrying planes during world war ii is captured by the nazis in this companion to printz honor winning code name verity 2012
rose under fire summary study guide bookrags com - Dec 07 2022
web rose under fire hyperion 2013 paperback rose under fire begins in southampton england with rose s first entry in a notebook she has received from her friend and fellow ata pilot maddie rose attempts to write an accident report for celia another fellow pilot who died in a plane crash
rose under fire by elizabeth wein review the guardian - Mar 10 2023
web jan 10 2015 elizabeth wein rose under fire rose under fire is a grippingly truthful story about survival and hope in a harsh world the majority of the plot takes place in a german prison camp during 1945
rose under fire elizabeth wein - Jan 08 2023

web code name verity cycle rose justice is a young pilot with the air transport auxiliary during the second world war on her way back from a semi secret flight in the waning days of the war rose is captured by the germans and ends up in ravensbrück the notorious nazi women s concentration camp

rose under fire book review youtube - Jan 28 2022

web my first booktube book review rose under fire by elizabeth wein because i m social goodreads goodreads com user show 3217959 erin linstagram

rose under fire by elizabeth wein goodreads - Jul 14 2023

web jun 1 2013 rose under fire tells the story of rose justice an american pilot who is captured and sent to the concentration camp ravensbrück which held primarily women and children the beginning of the story is a short day to day accounting in epistolary journal form of her duties as a pilot

rose under fire wein elizabeth author free download - Nov 06 2022

web rose justice is a young american pilot with britain s air transport auxiliary during the second world war on her way back from a routine flight in the waning days of the war rose is captured by the germans and sent to ravensbru ck the notorious women s concentration camp there she meets an unforgettable group of women

rose under fire wein elizabeth amazon com tr - Dec 27 2021

web rose under fire wein elizabeth amazon com tr Çerez tercihlerinizi seçin alışveriş deneyiminizi geliştirmek hizmetlerimizi sunmak müşterilerin hizmetlerimizi nasıl kullandığını anlayarak iyileştirmeler yapabilmek ve tanıtımları gösterebilmek için çerezler ve benzeri araçları kullanmaktayız

pdf epub rose under fire download oceanofpdf - Feb 26 2022

web aug 15 2022 full book name rose under fire author name elizabeth wein book genre adventure fiction historical historical fiction holocaust survival teen war world war ii young adult isbn 9781423183099 edition language english date of publication 2013 6 1 pdf epub file name rose under fire elizabeth wein pdf

why are there two characters named rose in rose under fire - Feb 09 2023

web nov 4 2020 two major characters in rose under fire by elizabeth wein have names that mean the same thing one is named róża rose in her native language and the other rose as far as i can remember this is brought up a

amazon com rose under fire 9781423184690 wein - Aug 03 2022

web sep 2 2014 don t miss elizabeth wein s stunning new novel stateless while flying an allied fighter plane from paris to england american ata pilot and amateur poet rose justice is captured by the nazis and sent to ravensbrück the notorious women s concentration camp trapped in horrific circumstances rose finds hope in the

rose under fire summary supersummary - Jun 13 2023

web plot summary rose under fire 2013 a historical novel written by elizabeth wein follows the protagonist rose justice a young pilot working for the air transport auxiliary throughout world war ii captured by the nazi regime during a secret flight near the end of the war justice is taken to ravensbrück the most notorious of the nazi

rose under fire literature tv tropes - Apr 11 2023

web rose under fire by elizabeth wein is a 2013 young adult historical novel set in ravensbrück a women s concentration camp during world war ii rose justice an american pilot for the british air transport auxiliary gets lost while flying from paris to england and is captured by the germans

rose under fire wikipedia - Aug 15 2023

web rose under fire is a young adult historical novel by elizabeth wein set in world war ii and published in 2013 the novel follows rose justice an 18 year old american volunteer air transport auxiliary pilot who is captured by the luftwaffe on a flight in france in 1944 and is sent to the ravensbrück concentration camp

rose under fire wein elizabeth amazon com tr kitap - Apr 30 2022

web arama yapmak istediğiniz kategoriyi seçin

amazon com rose under fire 9781423183099 wein - May 12 2023

web sep 10 2013 elizabeth wein author of the critically acclaimed and best selling code name verity delivers another stunning wwii thriller the unforgettable story of rose justice is forged from heart wrenching courage resolve and the slim bright chance of survival praise for rose under fire

rose under fire by elizabeth wein review the guardian - Oct 05 2022

web sep 6 2013 rose and the rabbits dream of escape rescue and telling the world when the women begin to get executed that is the message given to the survivors tell the world

rose under fire wikiquote - Jul 02 2022

web rose under fire is a young adult historical novel written by elizabeth wein it is a companion book to code name verity it was first published in 2013 rose under fire is narrated by rose justice an american teenager serving as a british air transport auxillary pilot during world war ii

nokia asha 306 wallpapers free download mobileheart - Dec 05 2022

web free nokia asha 306 wallpaper size asha series smart phones are very trendy for their fm radio nokiaasha 306 wallpapers free download on the peak of this device there is a 3 5mm earphone jack hot free wallpapers for nokia asha 306 all in all this device will beyond doubt draw the people nears it since of low cost and beautiful design

here is all homescreen and lockscreen wallpapers for your nokia asha - Oct 15 2023

web apr 17 2015 here is all homescreen and lockscreen wallpapers for your nokia asha running apps or games minimizing

trick for nokia asha 5xx 3 must have screenshooter apps for nokia asha 501

15 essential nokia asha tips and tricks microsoft devices blog - Aug 01 2022

web jan 27 2014 15 change wallpaper on lock and home screens changing the wallpaper on your asha is a great way to give it your personal touch open settings and scroll down to the personalisation section tap wallpaper for lock screen to pick a new image you can also select wallpaper for home screens to change the background

50 nokia lock screen wallpaper wallpapersafari com - Sep 02 2022

web jan 3 2018 nokia lock screen wallpaper jan 3 2018 832 views 95 downloads explore a curated colection of nokia lock screen wallpaper images for your desktop mobile and tablet screens we ve gathered more than 5 million images uploaded by our users and sorted them by the most popular ones

nokia asha photos and premium high res pictures getty images - Sep 14 2023

web browse getty images premium collection of high quality authentic nokia asha stock photos royalty free images and pictures nokia asha stock photos are available in a variety of sizes and formats to fit your needs

lock the keys and screen nokia asha 311 help doc - Oct 03 2022

web to lock press the key lock button 1 to unlock press the key lock button then swipe left or right 2 lock the keys and screen lock the keys and screen when not using your phone nokia asha 311

asha 201 themes - Apr 09 2023

web maple flash lite wallpaper digital clock with date and static wallpaper themes for nokia asha 210 futuristic dark clock theme nokia c3 00 x2 01 asha 210 302 futuristic dark clock theme for nokia c3 00 x2 01 asha 210 302

nokia asha 501 home screen background ask me fast - Apr 28 2022

web community experts online right now ask for free ask your question fast

nokia asha 305 wallpapers download 240x400 wallpapers to - Jul 12 2023

web download hd nokia asha 305 wallpapers to your nokia asha 305 get high quality 240x400 free downloadable nokia asha 305 wallpapers for your mobile device free mobile download from our website mobile site or mobiles24 on google play

software wallpapers for nokia asha 210 vividscreen info - Jan 06 2023

web nokia asha 210 software hd wallpapers and backgrounds apple in splashing vivid colors hd windows 8 green edition ios 13 grey dj mixing software app windows 10 dark intel core i7 processor bitcoin blockchain trust in cryptography ps4 pro console windows 10 lock screen windows 10 alcatel plus 10 windows 10 os windows 10

lock the keys and screen nokia asha 300 help doc - May 30 2022

web lock the keys and screen to avoid accidentally making a call when your phone is in your pocket or bag lock the keys and screen of your phone press the key lock button unlock the keys and screen press the key lock button and swipe the screen

from left to right in the animated arrow area

download wallpaper 240x400 door handle lock pink nokia asha - May 10 2023

web download 240x400 door handle lock pink wallpaper background nokia asha 311 samsung galaxy 580 omnia lg kp500

nokia asha 311 samsung galaxy 580 omnia lg kp500 desktop wallpapers - Mar 08 2023

web desktop wallpapers nokia asha 311 samsung galaxy 580 omnia lg kp500 hd backgrounds 240x400 sort wallpapers by date downloads ratings date desktop wallpapers hd backgrounds report develop by eastwood more wallpapers and features in the app exclusive wallpapers

software wallpapers for nokia asha 200 vividscreen info - Feb 24 2022

web great variety of software hd wallpapers for nokia asha 200 apple in splashing vivid colors hd windows 8 green edition ios 13 grey dj mixing software app windows 10 dark intel core i7 processor bitcoin blockchain trust in cryptography ps4 pro console windows 10 lock screen windows 10 alcatel plus 10 windows 10 os windows 10

landscape scenery nokia asha 311 wallpapers - Jun 11 2023

web download hd landscape scenery nokia asha 311 wallpapers to your nokia asha 311 get high quality 240x400 free landscape scenery downloadable nokia asha 311 wallpapers for your mobile device free mobile download from our website mobile site or mobiles24 on google play

lock nokia asha 311 samsung galaxy 580 omnia lg kp500 wallpapers - Aug 13 2023

web best 240x400 lock wallpaper nokia asha 311 samsung galaxy 580 omnia lg kp500 desktop background for any computer laptop tablet and phone

how to change lockscreen wallpaper on nokia g10 youtube - Mar 28 2022

web learn more hardreset info devices nokia nokia g10 view this video to learn how to change the lock screen wallpaper on your nokia g10 here s how

asha 501 tips tricks transparent lockscreen for nokia mobile - Jun 30 2022

web download this below image on your phone and set as a lockscreen wallpaper step iv now go to homescreen app page of your phone and just press the lock button

abstract nokia asha 305 wallpapers download 240x400 wallpapers - Feb 07 2023

web download hd abstract nokia asha 305 wallpapers to your nokia asha 305 get high quality 240x400 free abstract downloadable nokia asha 305 wallpapers for your mobile device free mobile download from our website mobile site or mobiles24 on google play

personalise your home screen nokia asha 302 - Nov 04 2022

web screen to personalise it to your liking change the wallpaper 1 select menu settings and display wallpaper 2 select a

folder and a picture you can also take a picture with your phone camera and use that picture tip download more wallpapers from nokia store for more information go to nokia com support

specialist and international specialist in - Jul 13 2023

web certification exam prior to attempting the smb ascp or smb ascp i certification exam role of a specialist in molecular biology smb uses molecular

ascp mb molecular biology exam questions practice test - Sep 03 2022

web concise and condensed this new ascp study guide 7th edition is perfectly tailored for study according to the current boc content outlines for the mls and mlt exams key

mb ascp technologist in molecular biology study - Jun 12 2023

web applications of molecular science coleman w tsongalis g eds 2017 diagnostic molecular pathology a guide to applied molecular testing elsevier inc

boc study guide 7th edition mls mlt clinical laboratory - Jul 01 2022

web get your ascp specialist in molecular biology exam trainng study materials here smb ascp exam content and study guide acc to boc guildines based on the

mb ascp technologist in molecular biology practice test - Feb 08 2023

web m ascp and m ascpi specialist and international specialist in microbiology sm ascp and sm ascpi examination content guideline

smb ascp exam prep study guide live classes online - Mar 29 2022

web smb ascp specialist in molecular biology the specialist in microbiology credentialed by the american society for clinical pathology acsp provides

ascp molecular biology certification mb ascp sm ascp - Apr 10 2023

web the american society of clinical pathology ascp certifies technologists in molecular biology by assessing their knowledge of molecular science and techniques laboratory

mb ascp technologist in molecular biology certification study - Aug 02 2022

web this convenient online test prep course helps you get ready for the m ascp technologist in microbiology exam in a few short weeks access these short lessons and quizzes to

smb ascp certification exam study material ascp molecular - Apr 29 2022

web for all educational levels the professional certification for microbiologists and molecular biologists is available through the american society of clinical pathology ascp which

mb ascp technologist in molecular biology study guide - Jan 07 2023

web use this comprehensive test preparation course to study for the mb ascp technologist in molecular biology exam the course contains short lessons and practice quizzes that

technologist and international technologist in - May 11 2023

web 1 130 flashcards learn created by ascp mb exam prep terms in this set 130 pyrimidine one carbon ring cytosine thymine uracil purine two carbon rings adenine

mb ascp technologist in molecular biology study com - Nov 24 2021

web mb ascp certified technologists conduct research both tests at the molecular leve does smb ascp certified professional not only conduct examinations but also introduce

and international technologist in molecular ascp - Aug 14 2023

web the mb exam questions encompass the following content areas within molecular biology molecular science molecular techniques laboratory operations and applications of

m ascp technologist in microbiology study guide exam prep - May 31 2022

web the smb ascp preparation online course is the all in one solution to be fully prepared for your specialist in molecular biology exam of the american society for clinical

mb ascp technologist in molecular biology study guide - Nov 05 2022

web description the technologist in molecular biology mb ascp certification examination offered by the ascp board of certification boc is composed of 100 questions given in

ascp molecular biology exam prep flashcards quizlet - Mar 09 2023

web be prepared for test day with this ascp technologist in molecular biology study guide it reviews the format timing and content of the mb ascp exam

medical laboratory scientist mls ascp - Oct 04 2022

web mb ascp is a certified molecular biology technologist by the american society of clinical pathology ascp board of certification boc it s for moelcuar biology technologists

microbiology molecular biology certifications m mb ascp - Feb 25 2022

web study guides the boc offers several boc study guides boc study guide for clinical laboratory certification examinations also available as a bundle with the mls online

smb ascp certification exam study material ascp molecular - Sep 22 2021

mb ascp exam prep mb ascp study material live classes - Oct 24 2021

get credentialed ascp - Dec 26 2021
web molecular biology certification by american society for clinical pathology mb ascp is beneficial for your career and personal life first of all you will catch superior
technologist and international technologist in - Dec 06 2022
web the mls exam questions encompass different content areas within medical laboratory science blood banking urinalysis and other body fluids chemistry hematology
smb ascp specialist in molecular biology vivian health - Jan 27 2022
web the mb ascp technologist in molecular biology exam overview contains key information on the mb ascp test s format content retake policies fees and more for teachers