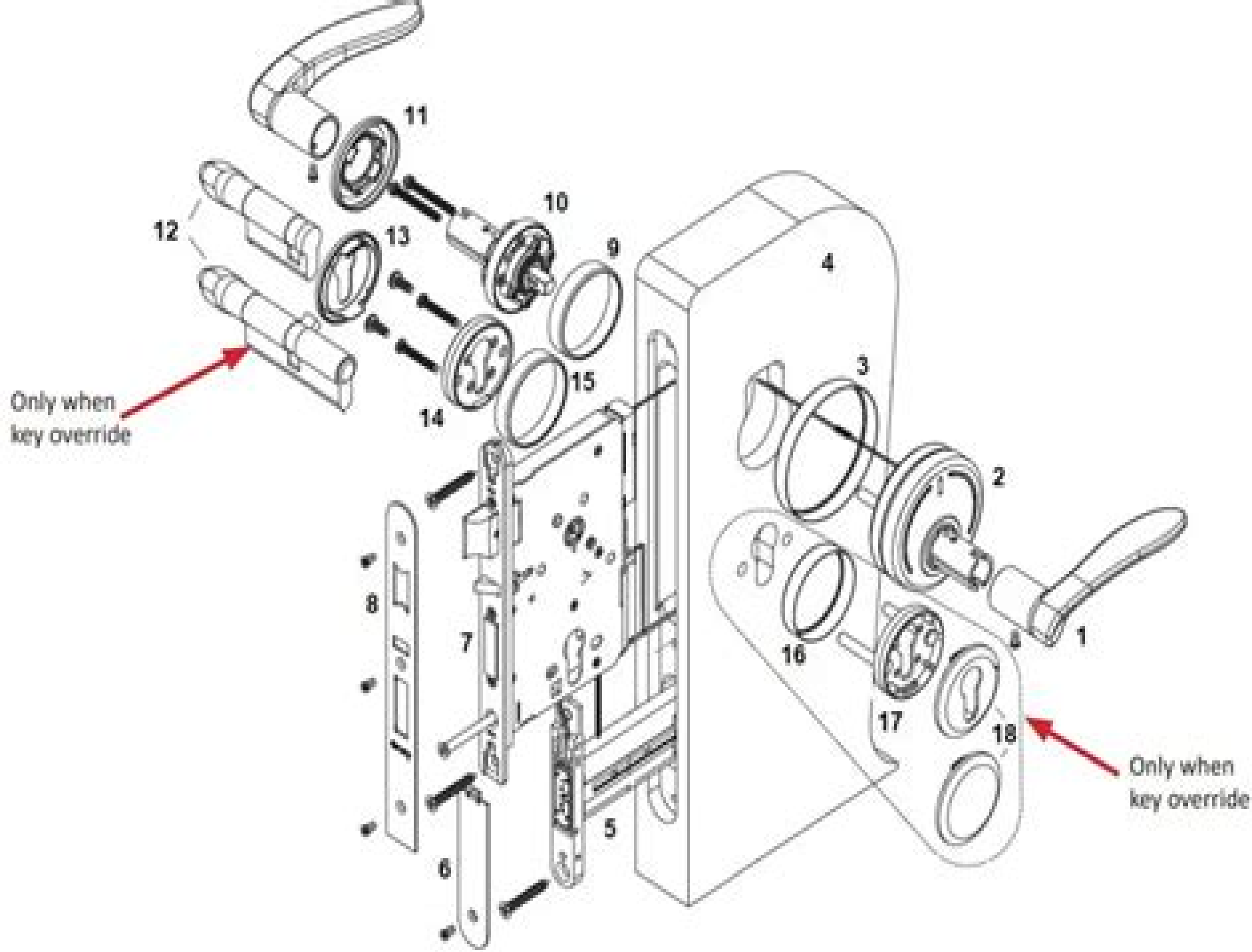
11
10
12
13
9
4
3
15
14
Only when
key override
2
8
7
16
1
17
18
Only when
key override
5
6

Onity Advance Locking System Service Manual

SB Merriam

Onity Advance Locking System Service Manual:

Hospitality Upgrade ,2006 **Hotels** ,2003-07 **Truck Wheel Lock Control System Service Manual Supplement** General Motors Corporation. Truck and Coach Division,1975 *Truck Wheel Lock Control System Service Manual Supplement* General Motors Corporation,1975 **Service Manual, American Car Locks** J. I. Levine,1982

Service manual Jerry Levine,1989

Getting the books **Onity Advance Locking System Service Manual** now is not type of inspiring means. You could not forlorn going gone book gathering or library or borrowing from your friends to edit them. This is an enormously easy means to specifically get lead by on-line. This online broadcast Onity Advance Locking System Service Manual can be one of the options to accompany you similar to having extra time.

It will not waste your time. take on me, the e-book will agreed appearance you supplementary issue to read. Just invest little mature to right of entry this on-line statement **Onity Advance Locking System Service Manual** as competently as review them wherever you are now.

https://marketlab.rehabmart.com/files/uploaded-files/fetch.php/Answers%20To%20Triola%20Elementary%20Statistics%205th%20Edition.pdf

Table of Contents Onity Advance Locking System Service Manual

1. Understanding the eBook Onity Advance Locking System Service Manual
    - The Rise of Digital Reading Onity Advance Locking System Service Manual
    - Advantages of eBooks Over Traditional Books
2. Identifying Onity Advance Locking System Service Manual
    - Exploring Different Genres
    - Considering Fiction vs. Non-Fiction
    - Determining Your Reading Goals
3. Choosing the Right eBook Platform
    - Popular eBook Platforms
    - Features to Look for in an Onity Advance Locking System Service Manual
    - User-Friendly Interface
4. Exploring eBook Recommendations from Onity Advance Locking System Service Manual
    - Personalized Recommendations
    - Onity Advance Locking System Service Manual User Reviews and Ratings

    - Onity Advance Locking System Service Manual and Bestseller Lists
5. Accessing Onity Advance Locking System Service Manual Free and Paid eBooks
    - Onity Advance Locking System Service Manual Public Domain eBooks
    - Onity Advance Locking System Service Manual eBook Subscription Services
    - Onity Advance Locking System Service Manual Budget-Friendly Options
6. Navigating Onity Advance Locking System Service Manual eBook Formats
    - ePub, PDF, MOBI, and More
    - Onity Advance Locking System Service Manual Compatibility with Devices
    - Onity Advance Locking System Service Manual Enhanced eBook Features
7. Enhancing Your Reading Experience
    - Adjustable Fonts and Text Sizes of Onity Advance Locking System Service Manual
    - Highlighting and Note-Taking Onity Advance Locking System Service Manual
    - Interactive Elements Onity Advance Locking System Service Manual
8. Staying Engaged with Onity Advance Locking System Service Manual
    - Joining Online Reading Communities
    - Participating in Virtual Book Clubs
    - Following Authors and Publishers Onity Advance Locking System Service Manual
9. Balancing eBooks and Physical Books Onity Advance Locking System Service Manual
    - Benefits of a Digital Library
    - Creating a Diverse Reading Collection Onity Advance Locking System Service Manual
10. Overcoming Reading Challenges
    - Dealing with Digital Eye Strain
    - Minimizing Distractions
    - Managing Screen Time
11. Cultivating a Reading Routine Onity Advance Locking System Service Manual
    - Setting Reading Goals Onity Advance Locking System Service Manual
    - Carving Out Dedicated Reading Time
12. Sourcing Reliable Information of Onity Advance Locking System Service Manual
    - Fact-Checking eBook Content of Onity Advance Locking System Service Manual
    - Distinguishing Credible Sources

13. Promoting Lifelong Learning
    - Utilizing eBooks for Skill Development
    - Exploring Educational eBooks
14. Embracing eBook Trends
    - Integration of Multimedia Elements
    - Interactive and Gamified eBooks

Onity Advance Locking System Service Manual Introduction

In the digital age, access to information has become easier than ever before. The ability to download Onity Advance Locking System Service Manual has revolutionized the way we consume written content. Whether you are a student looking for course material, an avid reader searching for your next favorite book, or a professional seeking research papers, the option to download Onity Advance Locking System Service Manual has opened up a world of possibilities. Downloading Onity Advance Locking System Service Manual provides numerous advantages over physical copies of books and documents. Firstly, it is incredibly convenient. Gone are the days of carrying around heavy textbooks or bulky folders filled with papers. With the click of a button, you can gain immediate access to valuable resources on any device. This convenience allows for efficient studying, researching, and reading on the go. Moreover, the cost-effective nature of downloading Onity Advance Locking System Service Manual has democratized knowledge. Traditional books and academic journals can be expensive, making it difficult for individuals with limited financial resources to access information. By offering free PDF downloads, publishers and authors are enabling a wider audience to benefit from their work. This inclusivity promotes equal opportunities for learning and personal growth. There are numerous websites and platforms where individuals can download Onity Advance Locking System Service Manual. These websites range from academic databases offering research papers and journals to online libraries with an expansive collection of books from various genres. Many authors and publishers also upload their work to specific websites, granting readers access to their content without any charge. These platforms not only provide access to existing literature but also serve as an excellent platform for undiscovered authors to share their work with the world. However, it is essential to be cautious while downloading Onity Advance Locking System Service Manual. Some websites may offer pirated or illegally obtained copies of copyrighted material. Engaging in such activities not only violates copyright laws but also undermines the efforts of authors, publishers, and researchers. To ensure ethical downloading, it is advisable to utilize reputable websites that prioritize the legal distribution of content. When downloading Onity Advance Locking System Service Manual, users should also consider the potential security risks associated with online platforms. Malicious actors may exploit vulnerabilities in unprotected websites to distribute malware or steal personal information. To

protect themselves, individuals should ensure their devices have reliable antivirus software installed and validate the legitimacy of the websites they are downloading from. In conclusion, the ability to download Onity Advance Locking System Service Manual has transformed the way we access information. With the convenience, cost-effectiveness, and accessibility it offers, free PDF downloads have become a popular choice for students, researchers, and book lovers worldwide. However, it is crucial to engage in ethical downloading practices and prioritize personal security when utilizing online platforms. By doing so, individuals can make the most of the vast array of free PDF resources available and embark on a journey of continuous learning and intellectual growth.

FAQs About Onity Advance Locking System Service Manual Books

1. Where can I buy Onity Advance Locking System Service Manual books? Bookstores: Physical bookstores like Barnes & Noble, Waterstones, and independent local stores. Online Retailers: Amazon, Book Depository, and various online bookstores offer a wide range of books in physical and digital formats.
2. What are the different book formats available? Hardcover: Sturdy and durable, usually more expensive. Paperback: Cheaper, lighter, and more portable than hardcovers. E-books: Digital books available for e-readers like Kindle or software like Apple Books, Kindle, and Google Play Books.
3. How do I choose a Onity Advance Locking System Service Manual book to read? Genres: Consider the genre you enjoy (fiction, non-fiction, mystery, sci-fi, etc.). Recommendations: Ask friends, join book clubs, or explore online reviews and recommendations. Author: If you like a particular author, you might enjoy more of their work.
4. How do I take care of Onity Advance Locking System Service Manual books? Storage: Keep them away from direct sunlight and in a dry environment. Handling: Avoid folding pages, use bookmarks, and handle them with clean hands. Cleaning: Gently dust the covers and pages occasionally.
5. Can I borrow books without buying them? Public Libraries: Local libraries offer a wide range of books for borrowing. Book Swaps: Community book exchanges or online platforms where people exchange books.
6. How can I track my reading progress or manage my book collection? Book Tracking Apps: Goodreads, LibraryThing, and Book Catalogue are popular apps for tracking your reading progress and managing book collections. Spreadsheets: You can create your own spreadsheet to track books read, ratings, and other details.
7. What are Onity Advance Locking System Service Manual audiobooks, and where can I find them? Audiobooks: Audio recordings of books, perfect for listening while commuting or multitasking. Platforms: Audible, LibriVox, and Google

Play Books offer a wide selection of audiobooks.

8. How do I support authors or the book industry? Buy Books: Purchase books from authors or independent bookstores. Reviews: Leave reviews on platforms like Goodreads or Amazon. Promotion: Share your favorite books on social media or recommend them to friends.
9. Are there book clubs or reading communities I can join? Local Clubs: Check for local book clubs in libraries or community centers. Online Communities: Platforms like Goodreads have virtual book clubs and discussion groups.
10. Can I read Onity Advance Locking System Service Manual books for free? Public Domain Books: Many classic books are available for free as theyre in the public domain. Free E-books: Some websites offer free e-books legally, like Project Gutenberg or Open Library.

Find Onity Advance Locking System Service Manual :

answers to triola elementary statistics 5th edition
antique and collectible price guide
anti lock braking wiring diagram for toyota surf
~~answers to unit1 algerbra2 apexlearning~~
~~ap bio practice test chapter 1~~
answers to vadets workbook module 10
answers to the 2014 nfhs baseball test
ap biology chapter 16 guided reading assignment answers
ap ab calculus 20scoring guidelines
~~ap comparative government study guide~~
antrobus complete english edition
ap biology 20scoring guide form b
aog american outdoor grill post barbecue patio mount user guide
antisocial behavior in school evidence based practices
aol city guide chicago il attractions

Onity Advance Locking System Service Manual :

Arturo Martini catalogo della mostra fatta a Treviso ex ... Publisher: Treviso, Neri Pozza - Canova 1967. Binding: Hardcover.

Dust Jacket Condition: Dust Jacket Included. About the Seller. Libreria Gullà Arturo Martini: Books ARTURO MARTINI - Ex Tempio Di Santa Caterina, Treviso, Italy - 1967. Italian Edition | by Arturo; Giuseppe Mazzotti Martini. Paperback. ARTURO MARTINI - Ex ... ARTURO MARTINI - Ex Tempio Di Santa Caterina, Treviso ... ARTURO MARTINI - Ex Tempio Di Santa Caterina, Treviso, Italy - 1967 : Martini, Arturo; Giuseppe Mazzotti: Amazon.de: Bücher. Arturo Martini-EN - Modern Art 2018/11/28 - Estimate Nov 28, 2018 — Treviso, Arturo Martini, Ex Tempio di Santa Caterina, 10 September - 12 November 1967, exh. cat. no. 169. Venice, Arturo Martini. Opere degli ... Arturo Martini, Arturo Martini "Deposizione "Pepori" 1933 ... "Arturo Martini" Ex Tempio di Santa Caterina, Treviso, September 10 - November 12 1967, n. 122 fig. 93 ill. in catalogue. G. Vianello, N. Stringa, C. Gian ... The young Arturo Martini The young Arturo Martini. Set off by the clear light of the cloister, around which open the rooms on the first floor, the works exhibited here showcase the ... Sold at Auction: Arturo Martini, ARTURO MARTINI Dec 21, 2022 — Arturo Martini, Ex Tempio di Santa Caterina, Treviso 1967, ill. cat ... The Artist's Resale Right has been in force in Italy since April 9th 2006 ... Arturo Martini. Catalogo della mostra. Treviso Catalogo di mostra, treviso, ex Tempio di Santa Caterina, 10 settembre - 12 novembre 1967. A cura di Giuseppe Mazzotti. Bibliografia. Catalogo delle opere. MARTINI, Arturo MARTINI, Arturo (Treviso, 1889 - Milano, 1947)Arturo Martini. ... Catalogo di mostra, treviso, ex Tempio di Santa Caterina, 10 settembre - 12 novembre 1967. ACELLUS ALGEBRA 2 Flashcards ALL UNITS Learn with flashcards, games, and more — for free. Acellus algebra 2 answer keys Sep 25, 2023 — Discover videos related to Acellus algebra 2 answer keys on TikTok. Acellus Algebra 2 Answers 49 Acellus Algebra 2 Answers 49. 1. Acellus Algebra 2 Answers 49. The Chaos Scenario. Fundamentals of Thermal-fluid Sciences. A Framework for K-12 Science ... acellus algebra 2 answers Sep 10, 2023 — Discover videos related to acellus algebra 2 answers on TikTok. Algebra II | Acellus Learning System Course Overview. Algebra II builds upon the algebraic concepts taught in Algebra I, continuing on to functions, expressions, etc. and providing students ... Algebra 2 Answers and Solutions 11th grade Algebra 2 answers, solutions, and theory for high school math, 10th to 11th grade. Like a math tutor, better than a math calculator or problem solver. Acellus Algebra 2 Acellus Algebra Ii Acellus Algebra 2 Answers YouTube April 23rd, 2018 - Acellus Algebra 2 Answers Andrea J Ward Loading APEX ALGEBRA II ANSWERS ALL. This is ... Acellus Answer Key Pdf - Fill Online, Printable, Fillable, Blank ... The Acellus answer key PDF is a document that contains the correct answers to questions and assignments in the Acellus educational program. Answered: Acellus Complete the equation… Mar 1, 2021 — Solution for Acellus Complete the equation describing ho x and y are related. 101 2 3 4 5 -2 2 6 7 y = x + [?] Enter the answer that ... By Scott Foresman Reading Street, Grade 1, Unit 3 ... Scott Foresman Reading Street (c) 2011 is an all-new comprehensive Reading and Language Arts series for the 21st Century. Reading Street delivers classic ... Reading Street 3.1: 9780328455621 Scott Foresman Reading Street Reading Street Grade 3 Student Edition, Volume 3.1 Features high-quality, authentic literature organized around units that ... Reading Street 1 3 by Scott Foresman Reading Street, Grade 5, Unit 3, Vol. 1, Teacher's Edition. Scott Foresman.

ISBN 13: 9780328470495. Seller: Hippo Books Hammond, IN, U.S.A.. Scott Foresman - Reading Street, Grade 1, Unit 3 Scott Foresman Reading Street (c) 2011 is an all-new comprehensive Reading and Language Arts series for the 21st Century. Reading Street delivers classic ... Reading Street 3 Unit 1 Test (P) [0328390240] - $4.95 Textbook and beyond Reading Street 3 Unit 1 Test (P) [0328390240] - 2010 Pearson Scott Foresman Reading Street Grade 3 Unit 1: Living and Learning -- Test ... Reading Street Comprehension Unit 1 Grade 3 Comprehension practice activities and comprehension tests for each main reading selection in the Reading Street 2011 Unit 1, grade 3 text. Reading streets grade 1 unit 3 Comprehension practice activities and comprehension tests for each main reading selection in the Reading Street 2011 Unit 1 , grade 3 ... Scott Foresman Reading Street Common Core Scott Foresman Reading Street - Common Core literacy program focuses on Common Core State Standards, readying children for college and career readiness. PDFs Reading Street Tests Grade 1. These are extra tests for the first grade level of the Scott-Forseman Reading Street series, for teachers and parents who are using the Reading Street ... Reading Street Common Core Edition Grade 1, Unit 3 Vol. 2 Scott Foresman: Reading Street Common Core Edition Grade 1, Unit 3 Vol. 2 ; Type. Study Guide ; Publication Name. Pearson ; Accurate description. 4.9 ; Reasonable ...