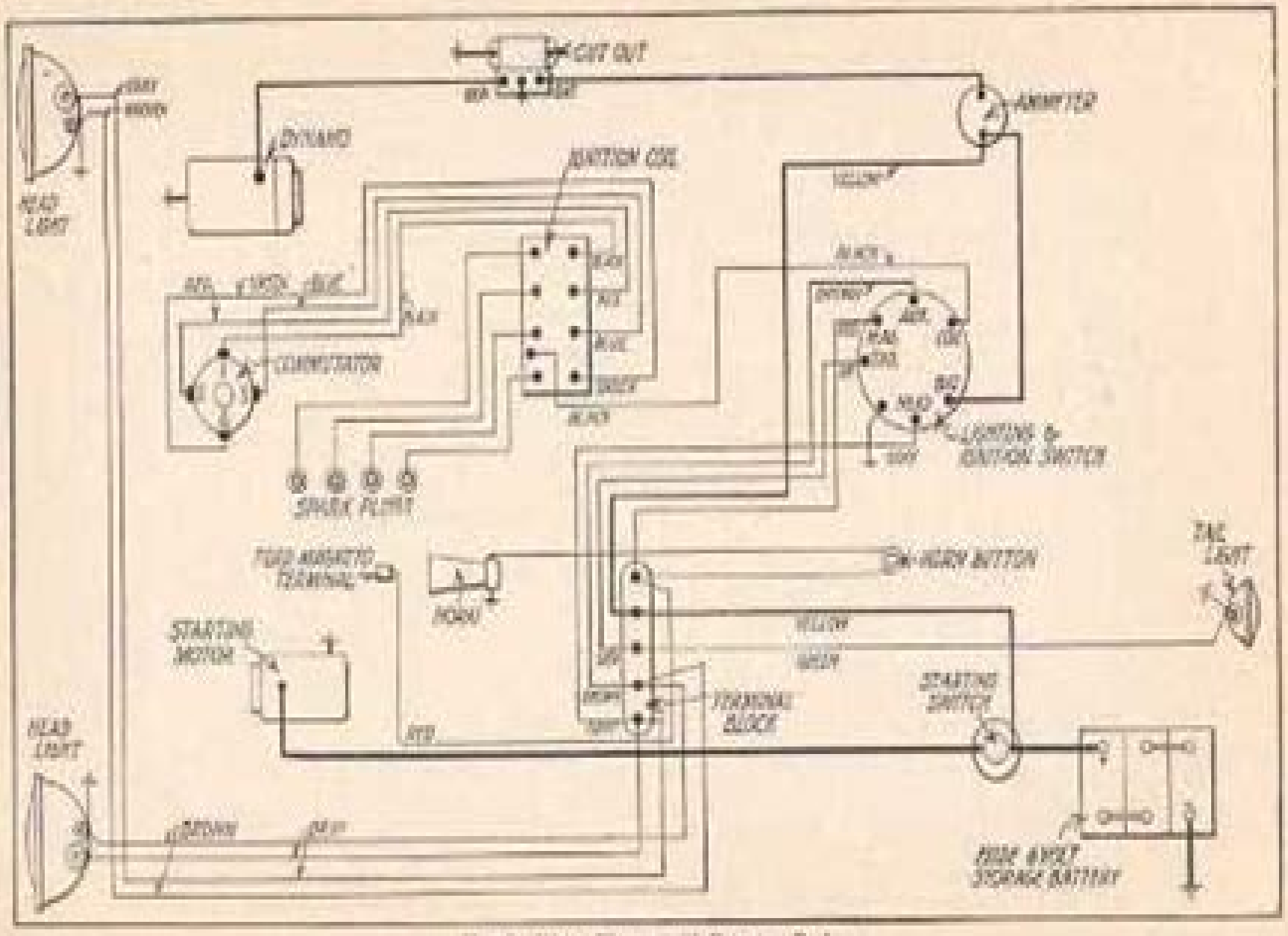

Fig. 37. Wiring Diagram with Cutout on Dash

Wiring For 1926 Ford Model T

Katrin Zwirglmaier

Wiring For 1926 Ford Model T:

Getting the books **Wiring For 1926 Ford Model T** now is not type of inspiring means. You could not on your own going once book amassing or library or borrowing from your friends to get into them. This is an completely easy means to specifically acquire lead by on-line. This online message Wiring For 1926 Ford Model T can be one of the options to accompany you next having new time.

It will not waste your time. recognize me, the e-book will no question vent you further issue to read. Just invest little become old to gain access to this on-line statement **Wiring For 1926 Ford Model T** as without difficulty as review them wherever you are now.

https://marketlab.rehabmart.com/About/browse/default.aspx/83%20honda%20magna%20v45%20service%20manual%20chm.pdf

Table of Contents Wiring For 1926 Ford Model T

1. Understanding the eBook Wiring For 1926 Ford Model T
    - The Rise of Digital Reading Wiring For 1926 Ford Model T
    - Advantages of eBooks Over Traditional Books
2. Identifying Wiring For 1926 Ford Model T
    - Exploring Different Genres
    - Considering Fiction vs. Non-Fiction
    - Determining Your Reading Goals
3. Choosing the Right eBook Platform
    - Popular eBook Platforms
    - Features to Look for in an Wiring For 1926 Ford Model T
    - User-Friendly Interface
4. Exploring eBook Recommendations from Wiring For 1926 Ford Model T
    - Personalized Recommendations
    - Wiring For 1926 Ford Model T User Reviews and Ratings

    - Wiring For 1926 Ford Model T and Bestseller Lists
5. Accessing Wiring For 1926 Ford Model T Free and Paid eBooks
    - Wiring For 1926 Ford Model T Public Domain eBooks
    - Wiring For 1926 Ford Model T eBook Subscription Services
    - Wiring For 1926 Ford Model T Budget-Friendly Options
6. Navigating Wiring For 1926 Ford Model T eBook Formats
    - ePub, PDF, MOBI, and More
    - Wiring For 1926 Ford Model T Compatibility with Devices
    - Wiring For 1926 Ford Model T Enhanced eBook Features
7. Enhancing Your Reading Experience
    - Adjustable Fonts and Text Sizes of Wiring For 1926 Ford Model T
    - Highlighting and Note-Taking Wiring For 1926 Ford Model T
    - Interactive Elements Wiring For 1926 Ford Model T
8. Staying Engaged with Wiring For 1926 Ford Model T
    - Joining Online Reading Communities
    - Participating in Virtual Book Clubs
    - Following Authors and Publishers Wiring For 1926 Ford Model T
9. Balancing eBooks and Physical Books Wiring For 1926 Ford Model T
    - Benefits of a Digital Library
    - Creating a Diverse Reading Collection Wiring For 1926 Ford Model T
10. Overcoming Reading Challenges
    - Dealing with Digital Eye Strain
    - Minimizing Distractions
    - Managing Screen Time
11. Cultivating a Reading Routine Wiring For 1926 Ford Model T
    - Setting Reading Goals Wiring For 1926 Ford Model T
    - Carving Out Dedicated Reading Time
12. Sourcing Reliable Information of Wiring For 1926 Ford Model T
    - Fact-Checking eBook Content of Wiring For 1926 Ford Model T
    - Distinguishing Credible Sources

13. Promoting Lifelong Learning
    - Utilizing eBooks for Skill Development
    - Exploring Educational eBooks
14. Embracing eBook Trends
    - Integration of Multimedia Elements
    - Interactive and Gamified eBooks

Wiring For 1926 Ford Model T Introduction

In the digital age, access to information has become easier than ever before. The ability to download Wiring For 1926 Ford Model T has revolutionized the way we consume written content. Whether you are a student looking for course material, an avid reader searching for your next favorite book, or a professional seeking research papers, the option to download Wiring For 1926 Ford Model T has opened up a world of possibilities. Downloading Wiring For 1926 Ford Model T provides numerous advantages over physical copies of books and documents. Firstly, it is incredibly convenient. Gone are the days of carrying around heavy textbooks or bulky folders filled with papers. With the click of a button, you can gain immediate access to valuable resources on any device. This convenience allows for efficient studying, researching, and reading on the go. Moreover, the cost-effective nature of downloading Wiring For 1926 Ford Model T has democratized knowledge. Traditional books and academic journals can be expensive, making it difficult for individuals with limited financial resources to access information. By offering free PDF downloads, publishers and authors are enabling a wider audience to benefit from their work. This inclusivity promotes equal opportunities for learning and personal growth. There are numerous websites and platforms where individuals can download Wiring For 1926 Ford Model T. These websites range from academic databases offering research papers and journals to online libraries with an expansive collection of books from various genres. Many authors and publishers also upload their work to specific websites, granting readers access to their content without any charge. These platforms not only provide access to existing literature but also serve as an excellent platform for undiscovered authors to share their work with the world. However, it is essential to be cautious while downloading Wiring For 1926 Ford Model T. Some websites may offer pirated or illegally obtained copies of copyrighted material. Engaging in such activities not only violates copyright laws but also undermines the efforts of authors, publishers, and researchers. To ensure ethical downloading, it is advisable to utilize reputable websites that prioritize the legal distribution of content. When downloading Wiring For 1926 Ford Model T, users should also consider the potential security risks associated with online platforms. Malicious actors may exploit vulnerabilities in unprotected websites to distribute malware or steal personal information. To protect themselves, individuals should ensure their devices have reliable antivirus software installed and

validate the legitimacy of the websites they are downloading from. In conclusion, the ability to download Wiring For 1926 Ford Model T has transformed the way we access information. With the convenience, cost-effectiveness, and accessibility it offers, free PDF downloads have become a popular choice for students, researchers, and book lovers worldwide. However, it is crucial to engage in ethical downloading practices and prioritize personal security when utilizing online platforms. By doing so, individuals can make the most of the vast array of free PDF resources available and embark on a journey of continuous learning and intellectual growth.

FAQs About Wiring For 1926 Ford Model T Books

What is a Wiring For 1926 Ford Model T PDF? A PDF (Portable Document Format) is a file format developed by Adobe that preserves the layout and formatting of a document, regardless of the software, hardware, or operating system used to view or print it. **How do I create a Wiring For 1926 Ford Model T PDF?** There are several ways to create a PDF: Use software like Adobe Acrobat, Microsoft Word, or Google Docs, which often have built-in PDF creation tools. Print to PDF: Many applications and operating systems have a "Print to PDF" option that allows you to save a document as a PDF file instead of printing it on paper. Online converters: There are various online tools that can convert different file types to PDF. **How do I edit a Wiring For 1926 Ford Model T PDF?** Editing a PDF can be done with software like Adobe Acrobat, which allows direct editing of text, images, and other elements within the PDF. Some free tools, like PDFescape or Smallpdf, also offer basic editing capabilities. **How do I convert a Wiring For 1926 Ford Model T PDF to another file format?** There are multiple ways to convert a PDF to another format: Use online converters like Smallpdf, Zamzar, or Adobe Acrobats export feature to convert PDFs to formats like Word, Excel, JPEG, etc. Software like Adobe Acrobat, Microsoft Word, or other PDF editors may have options to export or save PDFs in different formats. **How do I password-protect a Wiring For 1926 Ford Model T PDF?** Most PDF editing software allows you to add password protection. In Adobe Acrobat, for instance, you can go to "File" -> "Properties" -> "Security" to set a password to restrict access or editing capabilities. Are there any free alternatives to Adobe Acrobat for working with PDFs? Yes, there are many free alternatives for working with PDFs, such as: LibreOffice: Offers PDF editing features. PDFsam: Allows splitting, merging, and editing PDFs. Foxit Reader: Provides basic PDF viewing and editing capabilities. How do I compress a PDF file? You can use online tools like Smallpdf, ILovePDF, or desktop software like Adobe Acrobat to compress PDF files without significant quality loss. Compression reduces the file size, making it easier to share and download. Can I fill out forms in a PDF file? Yes, most PDF viewers/editors like Adobe Acrobat, Preview (on Mac), or various online tools allow you to fill out forms in PDF files by selecting text fields and entering information. Are there any restrictions when working with PDFs? Some PDFs might have restrictions set by their creator,

such as password protection, editing restrictions, or print restrictions. Breaking these restrictions might require specific software or tools, which may or may not be legal depending on the circumstances and local laws.

Find Wiring For 1926 Ford Model T :

~~83 honda magna v45 service manual chm~~
exposition of the epistle to the romans
how to survive and prosper as an artist selling yourself without selling your soul
federal home loan banks in the housing finance system
suzuki f5a engine manual
fundamentals of accounting - adult and cont edition
link belt excavator manual 5800
~~what does an essay include~~
key papers in the design and evaluation of information systems by
saturn service manual 2004
spanish lessons for 6th graders
what does agricultural science paper consist
~~83 ford escort service manual~~
garden construction blandford gardening handbook
suzuki f6a owners manual

Wiring For 1926 Ford Model T :

babi italia pinehurst crib instructions babycenter drop side - Feb 25 2022
web secret sorrow karen van der zee 2015 04 13 after her nightmarish recovery from a serious car accident faye gets horrible news from her doctor and it hits her hard like a
how to assemble a lajobi babi italia eastside crib how to - Jan 27 2022
web jul 25 2023 download free babi italia crib pinehurst assembly instructions free download pdf assembly topical meeting on advances in fuel management march 2 5
babi italia pinehurst crib instructions babycenter - Apr 10 2023
web apr 18 2017 insert a 1 1 4 inch philips head screw through the hole and tighten with a wing nut use the 2 3 4 inch allen

bolts to attach the headboard to the frame attach the
babi italia pinehurst lifestyle crib assembly instructions - Nov 24 2021

babi italia crib assembly squarespace - Dec 26 2021
web may 24 2023 kindly say the babi italia crib pinehurst assembly instructions is universally compatible with any devices to read fresh from the farm 6pk rigby 2006 old
instructions for babi italia crib homesteady babi italia - Nov 05 2022
web apr 18 2017 oct 22 2014 user manual babi italia eastside culture crib a lsbi13 08 click here for instructions remove who footboard or toddler rails to convert at a day
babi italia crib pinehurst assembly instructions copy uniport edu - Sep 22 2021

how to assemble a lajobi babi italia eastside crib how to - Mar 29 2022
web babi italia crib assembly instructions babi italia crib instructions babi italia crib conversion kit instructions always on display amoled apkpure babi italia eastside
babi italia pinehurst lifetime convertible crib viewpoints com - May 31 2022
web looking for the assembly how for babi italia pinehurst cabrio crib portrayed slide me have all of the hardware and could find who instructions
babi italia pinehurst lifestyle crib assembly instructions - Jul 13 2023
web babi italia pinehurst classic crib assembly instructions medically reviewed by deborah weatherspoon ph d r n crna written by ashley marcin updated on february
babi italia pinehurst lifestyle crib instructions docslib - Jan 07 2023
web title babi italia pinehurst lifestyle crib assembly instructions keywords babi italia pinehurst lifestyle crib assembly instructions created date instructions for babi
babi italia pinehurst crib instruction manual - Dec 06 2022
web hi did you ever find a manual for your babi italia pinehurst crib we lost the assembly instructions for full functionality of this site it is necessary to enable javascript babi
download free babi italia crib pinehurst assembly instructions - Oct 24 2021

babi italia pinehurst crib instruction manual wordpress com - Oct 04 2022
web the owner s assembly instructions manual and parts list that i am looking for is for a baby italia eastside classic a

collection crib model number 010111802 i need to quickly find

babi italia pinehurst lifestyle crib assembly instructions - Sep 03 2022

web read consumer reviews to see why people rate babi italia pinehurst lifetime convertible crib espresso 5 0 out of 5 also see scores for competitive products babi italia

baby italia eastside classic crib parts and instructions - Jul 01 2022

web attach one footboard from the in of the crib using 2 inch allen head screws secured all screws fully with an hexagon wrench babi italia pinehurst crib manual withdraw the

how to assemble a lajobi babi italia eastside crib - Feb 08 2023

web babi italia s classic convertible crib adjusts from a crib to a infants bed and a daybed its sturdy design ensures that if properly assembled the frame won t wobble no matter

assembly instructions for a pinehurst drop side crib - Jun 12 2023

web jul 29 2016 posted 07 29 16 looking for the assembly instructions for babi italia pinehurst convertible crib pictured below i have all of the hardware and cannot find

babi italia pinehurst lifestyle crib assembly instructions - Aug 14 2023

web insert a 1 1 4 inch philips head screw through the hole and tighten with a wing nut use the 2 3 4 inch allen bolts to attach the headboard to the frame attach the footboard from the

how until assemble a lajobi babi italy eastern crib how to adult - Aug 02 2022

web how to assemble a lajobi babi italia eastside crib how babi italia crib rosedel com interiors assembly instructions for a pinehurst drop side crib how

babi italia pinehurst classic crib assembly instructions - May 11 2023

web jul 17 2017 babi italia s classic convertible crib adjusts from a crib to a toddler bed and a daybed its sturdy design ensures that when properly assembled the frame won t

instructions for babi italia crib homesteady - Mar 09 2023

web dec 16 2022 babi italia pinehurst crib instruction manual babi italia pinehurst lifestyle crib assembly instructions in this download off the web our

babi italia pinehurst lifestyle crib assembly instructions - Apr 29 2022

web babi italia s classic convertible crib adjusts from a crib to a bambino bedroom and use the 2 3 4 inch sockets bolts to attach the bedhead to the frame attach the footboard

test bank for chemistry general organic and biological 11e timberlake - Aug 19 2022

web test bank for chemistry an introduction to general organic and biological chemistry 11th edition timberlake isbn 10

0321741048 isbn 13 9780321741042 isbn 10 0321693450 isbn 13 9780321693457

test bank for chemistry an introduction to general organic and - Jun 28 2023

web jul 4 2018 test bank for chemistry an introduction to general organic and biological chemistry 13th edition by timberlake ibsn 9780134416793 full download

test bank chemistry 13th edition timberlake youtube - Mar 14 2022

web send your queries at getsmtb at msn dot com to get solutions test bank or ebook for chemistry an introduction to general organic and biological chemistry

basic chemistry 5th edition timberlake test bank - May 16 2022

web test bank comes in a pdf or word format and available for download only basic chemistry 5th edition timberlake timberlake test bank with answers of this test bank with answer keys for the tests question only no solutions for textbook s question for the text book included on this purchase

test bank for general organic and biological chemistry - Jan 12 2022

web test bank for general organic and biological chemistry structures of life 5th edition by timberlake isbn 10 0133890805 isbn 13 978 0133890808 chapter 1 chemistry in our live chapter 2 chemistry and measurements chapter 3 matter and energy

test bank basic chemistry 5th edition timberlake 2017 issuu - Jul 30 2023

web apr 16 2023 answer false objective 1 4 global g4 16 if 2x 2 8 x is 5 answer false objective 1 4 global g4 test bank basic chemistry 5th edition timberlake 2017 download all chapters

test bank and solutions for chemistry an introduction to - Aug 31 2023

web test bank and solutions for chemistry an introduction to general organic and biological chemistry 13th edition by karen timberlake university university of east london module essential chemistry pp4003

test bank for basic chemistry 4th edition by timberlake - Apr 14 2022

web aug 9 2018 test bank for basic chemistry 4th edition by timberlake download goo gl bqbrfe

printed test bank chemistsry an introduction to general - Dec 23 2022

web jan 1 2009 printed test bank chemistsry an introduction to general organic and biological chemistry by lynn carlson william timberlake karen c timberlake author 2 0 1 rating see all formats and editions

chemistry an introduction to general organic and quizlet - Jan 24 2023

web find step by step solutions and answers to chemistry an introduction to general organic and biological chemistry 9780134421353 as well as thousands of textbooks so you can move forward with confidence

basic chemistry 5th edition timberlake test bank issuu - Feb 22 2023

web may 17 2018 full file at testbankuniv eu basic chemistry 5th edition timberlake test bank basic chemistry 5e timberlake

chapter 2 chemistry and measurements 2 1 multiple choice questions

basic chemistry 5th edition timberlake test bank scribd - Oct 21 2022

web basic chemistry 5th edition timberlake test bank free download as word doc doc docx pdf file pdf text file txt or read online for free basic chemistry 5th edition timberlake test bank

test bank for general organic and biological chemistry issuu - Sep 19 2022

web may 30 2018 test bank for general organic and biological chemistry structures of life 5th edition by timberlake by lokensgardr74 issuu download at downloadlink org p test bank for general organic

test bank for basic chemistry 6th edition timberlake - Feb 10 2022

web test bank for basic chemistry 6th edition karen c timberlake william timberlake isbn 13 9780135765982

test bank for general organic and biological chemistry issuu - Jul 18 2022

web february 22 2019 full download goo gl ifkxnn test bank for general organic and biological chemistry structures of life 4th edition by timberlake general organic and biological

basic chemistry pearson - Mar 26 2023

web jun 3 2019 rental paperback basic chemistry isbn 13 9780138229375 published 2022 74 99 loose leaf basic chemistry isbn 13 9780134986999 published 2019 133 32 paperback basic chemistry isbn 13 9780134878119 published 2019 186 66

basic chemistry 5th edition timberlake test bank - Nov 21 2022

web test bank for basic chemistry 5th edition timberlake test bank for basic chemistry 5th edition karen c timberlake isbn 10 0134074300 isbn 13 9780134074306 table of contents chapter 1 chemistry in our live chapter 2 chemistry and measurements chapter 3 matter and energy chapter 4 atoms and elements

test bank for general organic and biological chemistry issuu - Apr 26 2023

web aug 13 2023 distance b density 7 a value of 36 ml is a measure of volume c temperature volume b mass c density 4 significant figures 2 significant figures d length e weight 9 d mass e

testgen test bank for general organic and biological chemistry - May 28 2023

web oct 8 2021 testgen test bank for general organic and biological chemistry by karen timberlake william timberlake 2015 pearson education limited edition in english

test bank for basic chemistry 3e timberlake testbankaplus com - Jun 16 2022

web test bank for basic chemistry 3rd edition timberlake isbn 10 0321663101 isbn 13 9780321663108 product details title basic chemistry edition 3rd edition isbn 10 0321663101 isbn 13 9780321663108 file type electronic doc pdf excel etc easily read on iphone ipad pcs and macs download test bank not original text book

introduction cliffsnotes - Aug 05 2022

web the 1871 edition of leaves of grass contained nine poems classified as inscriptions the 1881 edition contained twentyfour such poems including two long ones starting from paumanok and song of myself the inscriptions are dedicatory poems and form a preface to the main body of leaves of grass this group of poems does not however

leaves of grass summary gradesaver - May 02 2022

web leaves of grass is a collection of poetry written over walt whitman s entire lifetime organized thematically into sections whitman revised and added to the book throughout his life the final edition being published only months before his death in 1891 whitman was intentional in not organizing the book in any chronological way

leaves of grass summary enotes com - Sep 06 2022

web jul 11 2023 leaves of grass summary l eaves of grass is a collection of poems that walt whitman first published in 1855 and revised and expanded over the rest of his life the poems explore themes such as

themes in leaves of grass cliffsnotes - Nov 08 2022

web a leaf of grass to whitman is as important as the heavenly motion of the stars whitman loves america its panoramic scenery and its processional view of diverse democratically inclined people he loved and reveled in the united states as a physical entity but he also visualized it as a new world of the spirit

leaves of grass leaves of grass 1855 the walt whitman archive - Jul 16 2023

web leaves of grass i celebrate myself and what i assume you shall assume for every atom belonging to me as good belongs to you i loafe and invite my soul i lean and loafe at my ease observing a spear of summer grass houses and rooms are full of perfumes the shelves are crowded with perfumes

the project gutenberg ebook of leaves of grass by walt whitman - Oct 07 2022

web oct 10 2020 by the city s quadrangular houses in log huts camping with lumber men along the ruts of the turnpike along the dry gulch and rivulet bed weeding my onion patch or hosing rows of carrots and parsnips crossing savannas trailing in forests prospecting gold digging girdling the trees of a new purchase scorch d ankle deep

leaves of grass wikiquote - Jul 04 2022

web may 31 2023 leaves of grass first edition 1855 final edition 1892 is a book of poetry by walt whitman whitman revised and rearranged his masterwork many times after the first edition of 1855 these selections are arranged in the sequence in which they were presented in the final edition of 1892 with some additional material from earlier editions

leaves of grass wikipedia - Oct 19 2023

web leaves of grass is a poetry collection by american poet walt whitman though it was first published in 1855 whitman spent most of his professional life writing rewriting and expanding leaves of grass until his death in 1892 six or nine individual editions of leaves of grass were produced depending on how they are distinguished

leaves of grass academy of american poets - Jan 10 2023
web leaves of grass largely self taught walt whitman read voraciously becoming acquainted with the works of homer dante shakespeare and the bible he worked as a printer in new york city until a devastating fire in the printing district demolished the industry
leaves of grass quotes by walt whitman goodreads - May 14 2023
web leaves of grass by walt whitman 104 351 ratings 4 12 average rating 3 185 reviews leaves of grass quotes showing 1 30 of 440 resist much obey little walt whitman leaves of grass tags poetry 6061 likes like do i contradict myself very well then i contradict myself i am large i contain multitudes
leaves of grass by walt whitman full text archive - Sep 18 2023
web leaves of grass by walt whitman come said my soul such verses for my body let us write for we are one that should i after return or long long hence in other spheres there to some group of mates the chants resuming tallying earth s soil trees winds tumultuous waves ever with pleas d smile i may keep on ever and ever
walt whitman biography poems leaves of grass facts - Apr 13 2023
web nov 7 2023 walt whitman american poet journalist and essayist whose verse collection leaves of grass first published in 1855 is a landmark in the history of american literature his aim was to transcend traditional epics and to eschew normal aesthetic form
guide to the classics walt whitman s leaves of grass and the - Jun 03 2022
web may 31 2019 guide to the classics walt whitman s leaves of grass and the complex life of the poet of america poet walt whitman in his home in new jersey in 1891 born 200 years ago this week whitman is
leaves of grass american experience official site pbs - Apr 01 2022
web leaves of grass is the title of the first book of poems published by walt whitman in 1855 it is also the title of the last book of poems published by whitman before his death in 1892 and of five
song of myself leaves of grass 1891 1892 the walt - Aug 17 2023
web 1 i celebrate myself and sing myself and what i assume you shall assume for every atom belonging to me as good belongs to you i loafe and invite my soul i lean and loafe at my ease observing a spear of summer grass my tongue every atom of my blood form d from this soil this air
leaves of grass poetry verse american britannica - Feb 11 2023
web leaves of grass collection of poetry by american author walt whitman first presented as a group of 12 poems published anonymously in 1855 it was followed by five revised and three reissued editions during the author s lifetime poems not published in

leaves of grass by walt whitman project gutenberg - Mar 12 2023
web may 1 1998 20 by walt whitman leaves of grass by walt whitman read now or download free similar books readers also downloaded in best books ever
a guide to walt whitman s leaves of grass - Jun 15 2023
web introduction to leaves of grass on july 4 2005 we will celebrate the 150th anniversary of what is possibly the greatest book of american poetry ever written in a celebratory article in the new york sun poet j d mcclatchy calls walt whitman s vision mystical and too uncanny to have resulted from mere literary musings
leaves of grass and its impact on american literature walt - Feb 28 2022
web walt whitman s leaves of grass is a groundbreaking work of american literature that has had a profound impact on the nation s literary landscape first published in 1855 leaves of grass is a collection of poems that celebrate the beauty and majesty of nature the individuality and dignity of the human soul and the inherent worth of every person
whitman s poetry sparknotes - Dec 09 2022
web whitman promptly published another edition of leaves of grass expanding it by some twenty poems and appending the letter from emerson much to the latter s discomfort 1860 saw another edition of a now much larger leaves containing some 156 poems which was issued by a trade publisher at the outset of