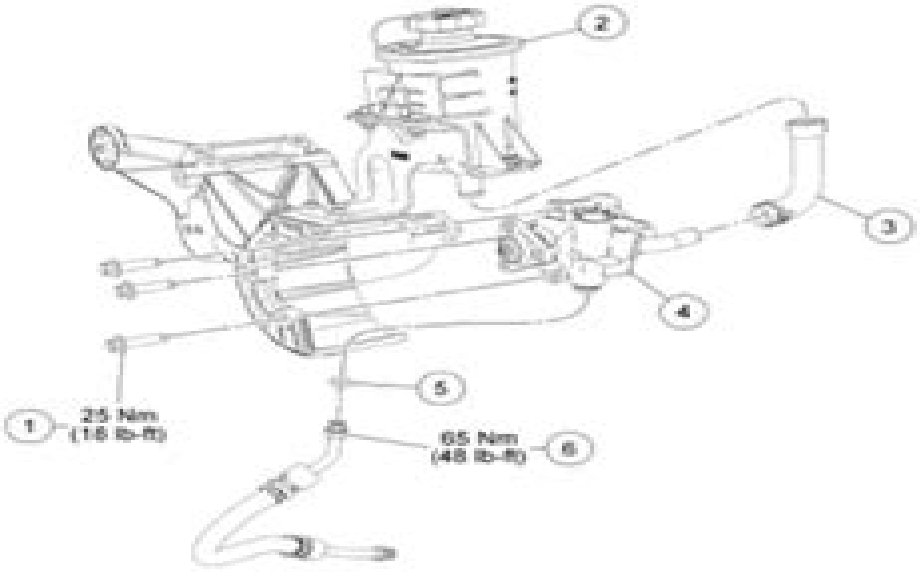

Fig. 6: Exploded View Of Power Steering Pump - 3.0L Engine With Torque Specifications
Courtesy of FORD MOTOR CO.

Item	Part Number	Description
1	N605784	Power steering pump bolt (3 required)
2	3R700	Power steering fluid reservoir
3	CS7617	Power steering pump supply hose
4	3A674	Power steering pump
5	N803257	Teflon® seal
6	3A719	Pressure line-to-pump fitting

REMOVAL & INSTALLATION

CAUTION: While repairing the power steering system, care should be taken to prevent the entry of foreign material or failure of the power steering components may result.

CAUTION: Do not allow power steering fluid to contact the engine accessory drive belt or the belt may be damaged.

1. Using a suitable suction device, remove the power steering fluid from the reservoir.
2. Remove the power steering pump pulley. For additional information, refer to **Power Steering Pump Pulley - 3.0L, 4.0L**.
3. Disconnect the pressure line-to-pump fitting.

2000 Ford Ranger Service Manual

Jicheng Xie

2000 Ford Ranger Service Manual:

2000 Ford Ranger Ford Motor Company,1999 *Chilton's Ford Ranger Pick-ups 2000-05 Repair Manual* Eric Jorgensen,Alan Ahlstrand,2007-03-02 Covers U S and Canadian models of Ford Ranger and Mazda B2300 B2500 B3000 B4000 pick ups *Chilton's Ford Ranger Pick-ups 2000-08 Repair Manual* Eric Jorgensen,Alan Ahlstrand,2009 Covers all U S and Canadian models of Ford Ranger and Mazda B2300 B2500 B3000 and B4000 pick ups Chilton's Ford Ranger Pick-ups Eric Jorgensen,Alan Ahlstrand,2011 Covers U S and Canadian models of Ford Ranger 2000 thru 2010 and Mazda B2300 B2500 B3000 and B4000 pick ups 2000 thru 2009 **2000 Ranger Workshop Manual** Ford Motor Company. Technical Support Operations,1999 **Chilton Ford Service Manual** ,2004 **93 - 97 Ford Ranger Repair Manual** , This is the PDF service repair manual for the Ford Ranger 1993 1997 The same manual autoshops and dealers reference to This isnt your everyday off the shelf autostore manual This manual is guranteed to be better than any autostore manual Detailed drawings Detail diagrams Detail step by step instructions Covers more than standard manuals Available as PDF no more damage manuals Chapters include Body Frame and Mounting Engine Suspension Driveline Brakes Transmission Clutch Exhaust system Fuel system Steering Climate Control system Instrumentation and Warning systems Battery and charging system Audio system Lighting Electrical Power supply Chilton's Ford Ranger Pick-Ups 2000-11 Repair Manual Eric Jorgensen,Alan Ahlstrand,2013 Covers U S and Canadian models of Ford Ranger 2000 through 2011 and Mazda B2300 B2500 B3000 and B4000 pick ups 2000 throgh 2009 Cover Popular Mechanics ,1985-09 Popular Mechanics inspires instructs and influences readers to help them master the modern world Whether it s practical DIY home improvement tips gadgets and digital technology information on the newest cars or the latest breakthroughs in science PM is the ultimate guide to our high tech lifestyle *Popular Mechanics* ,1984-03 Popular Mechanics inspires instructs and influences readers to help them master the modern world Whether it s practical DIY home improvement tips gadgets and digital technology information on the newest cars or the latest breakthroughs in science PM is the ultimate guide to our high tech lifestyle

Subject Guide to Books in Print ,2001 *Popular Mechanics* ,1985-06 Popular Mechanics inspires instructs and influences readers to help them master the modern world Whether it s practical DIY home improvement tips gadgets and digital technology information on the newest cars or the latest breakthroughs in science PM is the ultimate guide to our high tech lifestyle *American Book Publishing Record* ,2001 Popular Mechanics ,1984-05 Popular Mechanics inspires instructs and influences readers to help them master the modern world Whether it s practical DIY home improvement tips gadgets and digital technology information on the newest cars or the latest breakthroughs in science PM is the ultimate guide to our high tech lifestyle **Popular Mechanics** ,1984-04 Popular Mechanics inspires instructs and influences readers to help them master the modern world Whether it s practical DIY home improvement tips gadgets and digital technology information on the newest cars or the latest breakthroughs in science PM is the ultimate guide to our high tech

lifestyle **Semiconductor Design and Implementation Issues in Integrated Vehicle Electronics** John H. Hall,2005 This major research study provides a fresh critical look at the way automobile electronics are and should be built Written by Silicon Valley pioneer John Hall this book is based on his nearly 40 years of experience in developing and producing semiconductors for the automobile industry and other customers Highly readable and comprehensible for even beginning students of electronics and semiconductor design this volume provides an in depth explanation of the factors to be considered when building vehicle systems Starting with a concise history of vehicle electronics Hall walks the reader through the environmental conditions faced by these systems and the variety of failure mechanisms that can occur Basic and advanced semiconductor issues raised by vehicle implementation are then discussed in detail A wide range of issues confronting designers from over marketing of risky features to time and cost constraints are explained Complex electronic modules from many different manufacturers are examined and discussed as real world case studies of good and bad design techniques Hall concludes by providing design recommendations that will allow vehicle electronics system developers to build much tougher devices at little or no incremental production cost This book is the first major work to focus on key issues emerging as major causes of safety and performance problems Vehicle makers increasingly seek market advantages by providing ever more capable electronics in their products While these features add much value to vehicles they fail in ways that are beyond the experience and comprehension of most technicians and accident investigators By combining decades of design experience and innovation with extensive research Hall has produced unique insights and explanations so engineers can prevent most or perhaps all of these problems John Hall is one of Silicon Valley s most prolific independent pioneers and inventors He founded Union Carbide s semi conductor operation in 1962 He is a founder of Interstil and Micro Power Systems He is the inventor of the first electronic watch first LCD digital watch first CMOS liquid crystal display hand held calculator color autofocus cameras among many successful commercial products He has worked for many American and foreign automakers on specific projects such as integrated two way radios and seat belt interlocks He is working with DoD on hardening electronics systems against non nuclear events Chilton's Ford Repair Manual, 1980-1987 ,1987 The total Ford manual for multi vehicle owners information for all models cars and light trucks Gale's Auto Sourcebook ,1992 Guide to information on cars and light trucks **Popular Mechanics** ,1984-02 Popular Mechanics inspires instructs and influences readers to help them master the modern world Whether it s practical DIY home improvement tips gadgets and digital technology information on the newest cars or the latest breakthroughs in science PM is the ultimate guide to our high tech lifestyle **Popular Science** ,1984-01 Popular Science gives our readers the information and tools to improve their technology and their world The core belief that Popular Science and our readers share The future is going to be better and science and technology are the driving forces that will help make it better

The Captivating Realm of E-book Books: A Thorough Guide Unveiling the Benefits of Kindle Books: A World of Ease and Versatility Kindle books, with their inherent portability and simplicity of access, have freed readers from the constraints of physical books. Gone are the days of lugging bulky novels or meticulously searching for specific titles in shops. E-book devices, stylish and lightweight, effortlessly store an extensive library of books, allowing readers to indulge in their preferred reads anytime, anywhere. Whether commuting on a busy train, lounging on a sun-kissed beach, or simply cozying up in bed, Kindle books provide an unparalleled level of ease. A Literary Universe Unfolded: Exploring the Wide Array of E-book 2000 Ford Ranger Service Manual 2000 Ford Ranger Service Manual The E-book Shop, a digital treasure trove of literary gems, boasts an extensive collection of books spanning varied genres, catering to every readers taste and preference. From captivating fiction and mind-stimulating non-fiction to classic classics and contemporary bestsellers, the E-book Shop offers an exceptional abundance of titles to explore. Whether seeking escape through engrossing tales of fantasy and adventure, delving into the depths of historical narratives, or broadening ones knowledge with insightful works of science and philosophical, the E-book Shop provides a doorway to a bookish world brimming with endless possibilities. A Revolutionary Force in the Literary Scene: The Lasting Influence of E-book Books 2000 Ford Ranger Service Manual The advent of Kindle books has unquestionably reshaped the literary landscape, introducing a model shift in the way books are published, distributed, and read. Traditional publication houses have embraced the digital revolution, adapting their strategies to accommodate the growing demand for e-books. This has led to a rise in the availability of Kindle titles, ensuring that readers have entry to a vast array of literary works at their fingers. Moreover, Kindle books have democratized access to books, breaking down geographical barriers and offering readers worldwide with similar opportunities to engage with the written word. Irrespective of their place or socioeconomic background, individuals can now engross themselves in the intriguing world of books, fostering a global community of readers. Conclusion: Embracing the Kindle Experience 2000 Ford Ranger Service Manual Kindle books 2000 Ford Ranger Service Manual, with their inherent ease, flexibility, and vast array of titles, have undoubtedly transformed the way we experience literature. They offer readers the freedom to explore the boundless realm of written expression, whenever, anywhere. As we continue to travel the ever-evolving digital landscape, Kindle books stand as testament to the lasting power of storytelling, ensuring that the joy of reading remains reachable to all.

https://marketlab.rehabmart.com/results/uploaded-files/Documents/Buffalo%20Nas%20User%20Manual.pdf

Table of Contents 2000 Ford Ranger Service Manual

1. Understanding the eBook 2000 Ford Ranger Service Manual
    - The Rise of Digital Reading 2000 Ford Ranger Service Manual
    - Advantages of eBooks Over Traditional Books
2. Identifying 2000 Ford Ranger Service Manual
    - Exploring Different Genres
    - Considering Fiction vs. Non-Fiction
    - Determining Your Reading Goals
3. Choosing the Right eBook Platform
    - Popular eBook Platforms
    - Features to Look for in an 2000 Ford Ranger Service Manual
    - User-Friendly Interface
4. Exploring eBook Recommendations from 2000 Ford Ranger Service Manual
    - Personalized Recommendations
    - 2000 Ford Ranger Service Manual User Reviews and Ratings
    - 2000 Ford Ranger Service Manual and Bestseller Lists
5. Accessing 2000 Ford Ranger Service Manual Free and Paid eBooks
    - 2000 Ford Ranger Service Manual Public Domain eBooks
    - 2000 Ford Ranger Service Manual eBook Subscription Services
    - 2000 Ford Ranger Service Manual Budget-Friendly Options
6. Navigating 2000 Ford Ranger Service Manual eBook Formats
    - ePub, PDF, MOBI, and More
    - 2000 Ford Ranger Service Manual Compatibility with Devices
    - 2000 Ford Ranger Service Manual Enhanced eBook Features
7. Enhancing Your Reading Experience
    - Adjustable Fonts and Text Sizes of 2000 Ford Ranger Service Manual
    - Highlighting and Note-Taking 2000 Ford Ranger Service Manual
    - Interactive Elements 2000 Ford Ranger Service Manual
8. Staying Engaged with 2000 Ford Ranger Service Manual

    - Joining Online Reading Communities
    - Participating in Virtual Book Clubs
    - Following Authors and Publishers 2000 Ford Ranger Service Manual
9. Balancing eBooks and Physical Books 2000 Ford Ranger Service Manual
    - Benefits of a Digital Library
    - Creating a Diverse Reading Collection 2000 Ford Ranger Service Manual
10. Overcoming Reading Challenges
    - Dealing with Digital Eye Strain
    - Minimizing Distractions
    - Managing Screen Time
11. Cultivating a Reading Routine 2000 Ford Ranger Service Manual
    - Setting Reading Goals 2000 Ford Ranger Service Manual
    - Carving Out Dedicated Reading Time
12. Sourcing Reliable Information of 2000 Ford Ranger Service Manual
    - Fact-Checking eBook Content of 2000 Ford Ranger Service Manual
    - Distinguishing Credible Sources
13. Promoting Lifelong Learning
    - Utilizing eBooks for Skill Development
    - Exploring Educational eBooks
14. Embracing eBook Trends
    - Integration of Multimedia Elements
    - Interactive and Gamified eBooks

2000 Ford Ranger Service Manual Introduction

2000 Ford Ranger Service Manual Offers over 60,000 free eBooks, including many classics that are in the public domain. Open Library: Provides access to over 1 million free eBooks, including classic literature and contemporary works. 2000 Ford Ranger Service Manual Offers a vast collection of books, some of which are available for free as PDF downloads, particularly older books in the public domain. 2000 Ford Ranger Service Manual : This website hosts a vast collection of scientific articles, books, and textbooks. While it operates in a legal gray area due to copyright issues, its a popular resource for finding various publications. Internet Archive for 2000 Ford Ranger Service Manual : Has an extensive collection of digital

content, including books, articles, videos, and more. It has a massive library of free downloadable books. Free-eBooks 2000 Ford Ranger Service Manual Offers a diverse range of free eBooks across various genres. 2000 Ford Ranger Service Manual Focuses mainly on educational books, textbooks, and business books. It offers free PDF downloads for educational purposes. 2000 Ford Ranger Service Manual Provides a large selection of free eBooks in different genres, which are available for download in various formats, including PDF. Finding specific 2000 Ford Ranger Service Manual, especially related to 2000 Ford Ranger Service Manual, might be challenging as theyre often artistic creations rather than practical blueprints. However, you can explore the following steps to search for or create your own Online Searches: Look for websites, forums, or blogs dedicated to 2000 Ford Ranger Service Manual, Sometimes enthusiasts share their designs or concepts in PDF format. Books and Magazines Some 2000 Ford Ranger Service Manual books or magazines might include. Look for these in online stores or libraries. Remember that while 2000 Ford Ranger Service Manual, sharing copyrighted material without permission is not legal. Always ensure youre either creating your own or obtaining them from legitimate sources that allow sharing and downloading. Library Check if your local library offers eBook lending services. Many libraries have digital catalogs where you can borrow 2000 Ford Ranger Service Manual eBooks for free, including popular titles.Online Retailers: Websites like Amazon, Google Books, or Apple Books often sell eBooks. Sometimes, authors or publishers offer promotions or free periods for certain books.Authors Website Occasionally, authors provide excerpts or short stories for free on their websites. While this might not be the 2000 Ford Ranger Service Manual full book , it can give you a taste of the authors writing style.Subscription Services Platforms like Kindle Unlimited or Scribd offer subscription-based access to a wide range of 2000 Ford Ranger Service Manual eBooks, including some popular titles.

FAQs About 2000 Ford Ranger Service Manual Books

How do I know which eBook platform is the best for me? Finding the best eBook platform depends on your reading preferences and device compatibility. Research different platforms, read user reviews, and explore their features before making a choice. Are free eBooks of good quality? Yes, many reputable platforms offer high-quality free eBooks, including classics and public domain works. However, make sure to verify the source to ensure the eBook credibility. Can I read eBooks without an eReader? Absolutely! Most eBook platforms offer webbased readers or mobile apps that allow you to read eBooks on your computer, tablet, or smartphone. How do I avoid digital eye strain while reading eBooks? To prevent digital eye strain, take regular breaks, adjust the font size and background color, and ensure proper lighting while reading eBooks. What the advantage of interactive eBooks? Interactive eBooks incorporate multimedia elements, quizzes, and activities, enhancing the reader engagement and providing a more immersive learning experience. 2000 Ford Ranger Service Manual is

one of the best book in our library for free trial. We provide copy of 2000 Ford Ranger Service Manual in digital format, so the resources that you find are reliable. There are also many Ebooks of related with 2000 Ford Ranger Service Manual. Where to download 2000 Ford Ranger Service Manual online for free? Are you looking for 2000 Ford Ranger Service Manual PDF? This is definitely going to save you time and cash in something you should think about. If you trying to find then search around for online. Without a doubt there are numerous these available and many of them have the freedom. However without doubt you receive whatever you purchase. An alternate way to get ideas is always to check another 2000 Ford Ranger Service Manual. This method for see exactly what may be included and adopt these ideas to your book. This site will almost certainly help you save time and effort, money and stress. If you are looking for free books then you really should consider finding to assist you try this. Several of 2000 Ford Ranger Service Manual are for sale to free while some are payable. If you arent sure if the books you would like to download works with for usage along with your computer, it is possible to download free trials. The free guides make it easy for someone to free access online library for download books to your device. You can get free download on free trial for lots of books categories. Our library is the biggest of these that have literally hundreds of thousands of different products categories represented. You will also see that there are specific sites catered to different product types or categories, brands or niches related with 2000 Ford Ranger Service Manual. So depending on what exactly you are searching, you will be able to choose e books to suit your own need. Need to access completely for Campbell Biology Seventh Edition book? Access Ebook without any digging. And by having access to our ebook online or by storing it on your computer, you have convenient answers with 2000 Ford Ranger Service Manual To get started finding 2000 Ford Ranger Service Manual, you are right to find our website which has a comprehensive collection of books online. Our library is the biggest of these that have literally hundreds of thousands of different products represented. You will also see that there are specific sites catered to different categories or niches related with 2000 Ford Ranger Service Manual So depending on what exactly you are searching, you will be able tochoose ebook to suit your own need. Thank you for reading 2000 Ford Ranger Service Manual. Maybe you have knowledge that, people have search numerous times for their favorite readings like this 2000 Ford Ranger Service Manual, but end up in harmful downloads. Rather than reading a good book with a cup of coffee in the afternoon, instead they juggled with some harmful bugs inside their laptop. 2000 Ford Ranger Service Manual is available in our book collection an online access to it is set as public so you can download it instantly. Our digital library spans in multiple locations, allowing you to get the most less latency time to download any of our books like this one. Merely said, 2000 Ford Ranger Service Manual is universally compatible with any devices to read.

Find 2000 Ford Ranger Service Manual :

buffalo nas user manual

buffy contre les vires saison t0le prix des souhaits
building and structural construction n6 question papers
budynas solution manual stress analysis
bulova 96r129 watches owners manual
burndt fingers bacon sasage recipe
~~building science ntriangles of forces~~
burger king foundations test
~~building showjumping courses a guide for beginners~~
bulldog remote start manual
buick century p1189 code
bulgogi recipe red leave stir fry marinade
burn ellie goulding key board notes
bullets brother lono
building block of matter crossward puzzle answer

2000 Ford Ranger Service Manual :

traktörler biçerdöverler deutz fahr - Dec 06 2022
web jun 21 2023 find many great new used options and get the best deals for deutz farh ku250dn haybob tedder turner at the best online prices at ebay free delivery for
deutz fahr ku 250 haybob - Nov 05 2022
web deutz fahr ku250 haybob with pto in catalogue for agricultural machinery implement
deutz fahr ku250 hay rake tractorbynet - Mar 09 2023
web traktör ve tarım makineleri yelpazemizi keşfedin deutz fahr çiftçilere tarladaki performanslarını iyileştirecek araçlar sağlar
deutz fahr ku250 haybob c w gates price estimate - Feb 08 2023
web aug 16 2023 deutz fahr ku 250 haybob in timed online sale of mobile homes and farm mac prev lot 224 next lot 226 auction date 16 aug 2023 09 00 bst hammer
deutz fahr ku250dn haybob the farming forum - Aug 14 2023
web jun 3 2023 about press copyright contact us creators advertise developers terms privacy policy safety how youtube works test new features nfl sunday ticket

deutz fahr ku250 haybob help environment harvard edu - Jan 27 2022
web deutz fahr ku250 haybob the cottage of curiosities pengelly series book 2 feb 26 2022 come home to 59 memory lane with a new novel from the top kindle and usa
deutz fahr ku 250 haybob i bidder com - Jan 07 2023
web deutz fahr turkey 327 posts 11 7k followers 19 following deutz fahr turkey kalİtenİn adresİ deutz fahr reklam için dm
deutz fahr haybob youtube - Sep 22 2021

deutz farh ku250dn haybob tedder turner ebay - Sep 03 2022
web deutz fahr mower combine hayturner arm 0656747900 x2 19 95 1 in stock
deutz fahr ku250 haybob cyberlab sutd edu sg - Oct 24 2021

deutz fahr resimleri fiyat listesi traktör - Apr 29 2022
web deutz fahr ku250 haybob yeah reviewing a book deutz fahr ku250 haybob could accumulate your near contacts listings this is just one of the solutions for insight of
deutz fahr ku 250 dn haybob good condition no vat - Apr 10 2023
web bid live on lot 225 in the timed online sale of mobile homes and farm machinery to include dispersal sale on behalf of d h wilson auction from clarke and simpson
deutz fahr turner parts new used parts westlake - May 31 2022
web jun 13 2023 deutz fahr haybob ku 250 manual ebooks deutz fahr haybob ku 250 manual is available on pdf epub and doc format you can directly download and save
deutz fahr ku250 haybob secure4 khronos - Dec 26 2021
web bobbing
deutz fahr ku250dn haybob bidspotter co uk - Jul 01 2022
web april 25th 2018 deutz fahr ku250 haybob the farming forum deutz fahr ku250 haybob discussion in general for sale started by tim g mar 20 2013 tim g member deutz
deutz fahr turkey deutz fahr turkey instagram - Oct 04 2022
web deutz fahr ku250dn haybob in agricultural machinery this auction is live you need to be registered and approved to bid at this auction watch the auction as a guest you have
deutz fahr ku250 haybob home rightster com - Mar 29 2022
web jun 17 2023 item deutz fahr ku250 haybob you deutz fahr combi star haymakers ku 250 dn parts manual ku250dn

deutz fahr sdf e parts 2012 is a comprehensive

deutz fahr ku250 haybob the farming forum - Jun 12 2023

web sep 1 2014 mark addison uses the fordson super dexta with a deutz fahr ku 250 dn and a kuhn girostar grs 21 to ted and row a light crop of hay in kent summer 2014

deutz fahr ku250 haybob pdf pdf old thecarguy com - Nov 24 2021

haybob fahr ku25 deutz f2l514 kanten schwaden 4k youtube - Jul 13 2023

web mar 20 2013 this site uses cookies to help personalise content tailor your experience and to keep you logged in if you register by continuing to use this site you are consenting to

deutz fahr ku250 haybob with pto i bidder com - Aug 02 2022

web may 14 2009 deutz fahr fiyat listesi agrolux 57 dt kabinli 52 551 tl agrolux 67 dt tenteli 56 539 tl agrolux 67 dt kabinli 60 138 tl agrolux 80 dt tenteli

fordson super dexta tedding hay with deutz fahr ku250 and - May 11 2023

web lot 3230 of 440 deutz fahr ku250 haybob c w gates click image to enlarge previous next lot closed winning bid 460 add to watchlist ask a question cambridge

deutz fahr ku250 haybob secure4 khronos - Feb 25 2022

web introduction deutz fahr ku250 haybob pdf pdf local souls allan gurganus 2013 11 28 in his first work of fiction in a decade allan gurganus returns to the mythic site of his

bbc world service welcome to my world episode guide - Jun 29 2023

web nov 12 2012 the 25 anniversary concert live from memphis best picture sound qualitymore tags dire straits mark knopfler brian setzer nick lowe rockpile dave edmunds

water firms in england and wales ordered to cut 114m from bills - Jun 05 2021

web sep 29 2023 link copied a famous tree that has stood sentinel on britain s roman built hadrian s wall for more than 200 years has been deliberately felled in what authorities

all liquor stores closed in philadelphia after multiple stores were - Jul 07 2021

web sep 28 2023 here are the events peak dates draconids october 8 orionids october 20 21 southern taurids november 4 5 northern taurids november 11 12 leonids

video 16 year old boy arrested after famous british tree cnn - Apr 03 2021

web sep 27 2023 a video from a over a year ago has resurfaced online showing an official appearing to ignore a young black gymnast during an awards ceremony at an event in

world english second edition real people real places real - Feb 11 2022
web welcome to my world is a song recorded by south korean girl group aespa featuring naevis it was released as a pre release single for their third extended play my world by
cassidy hutchinson s new book solves one of the big cnn - Mar 03 2021

welcome to my world english edition kindle edition amazon de - Mar 27 2023
web welcome to my world by miranda dickinson 2010 avon edition in english it looks like you re offline donate an edition of welcome to my world 2010 welcome to my
welcome to my world 2010 edition open library - Feb 23 2023
web welcome to our world is a three level pre primary series that uses traditional children s songs from around the world with national geographic photos and content to introduce
world english intro with my world english online - Dec 12 2021
web welcome welcome to my world 30 vocabulary p4 1 encourage ss to focus first on transparent and familiar words after they check with the audio do choral repetition you
video see heartbreaking moment young black gymnast is - Jan 30 2021

the world is waiting welcome to our world 2e ngl sites - Sep 01 2023
web teach english through music motion and culture with welcome to our world second edition a 3 level series for very young learners of english shape young global citizens
welcome to my world song elvis presley the king gaana com - May 17 2022
web hello sign in account lists returns orders cart
welcome to my world elvis presley youtube - May 29 2023
the most famous version was performed by country music singer jim reeves who styled the song in his favoured style of nashville sound reeves version was included on his 1962 album a touch of velvet and was released as a single in the united states in early 1964 reaching no 2 on the billboard hot country singles chart in the spring of that year it was also occasionally aired on pop radio stations reaching the no 2 spot on billboard s bubbling under hot 100 chart the s
welcome to our world second edition ngl elt catalog - Dec 24 2022
web albums welcome to my world dean martin album 1967 welcome to my world elvis presley album 1977 welcome to my world jonathan fagerlund album 2009
welcome to my world jim reeves song wikipedia - Apr 27 2023

web welcome to my world english edition ebook weir johnny amazon de kindle store

aespa welcome to my world ft nævis english - Jul 31 2023

web a teenage girl from hong kong describes the pressure of being an only child

amazon in welcome to my world - Apr 15 2022

web welcome to my world english edition by johnny weir world english 2nd edition national geographic learning about level 1 english world macmillan young learners

welcome to our world ngl elt catalog series - Jan 25 2023

web the world is waiting teach english through music motion and culture with welcome to our world second edition a 3 level series for very young learners of

welcome to my world by martha c pennington open library - Oct 22 2022

web overview with world english learners experience the world through content and ideas from national geographic and ted providing the motivation to talk about what s most

world english intro with my world english online ngl elt - Sep 20 2022

web welcome to my world 1977 moody blue 1977 welcome to my world is a compilation album by american singer and musician elvis presley released by rca records on

welcome to my world aespa song wikipedia - Jan 13 2022

web welcome to our world is a three level preprimary series in american english it uses traditional children s songs from around the world with amazing national geographic

welcome to my world wikipedia - Nov 22 2022

web welcome to my world by martha c pennington theresa malphrus welford 2019 equinox publishing limited edition in english

welcome to ur world book 2 se cengage - Nov 10 2021

web sep 22 2023 welcome to a new era of the world s game on pc ea sports fc 24 welcomes you to the most true to football experience ever created on pc with

ea sports fc 24 pc update electronic arts - Sep 08 2021

web sep 27 2023 all liquor stores in philadelphia were closed wednesday after several locations were looted shortly after the conclusion of peaceful protests against a judge s

england v samoa rugby world cup 2023 when is it and how to - Aug 08 2021

web sep 26 2023 julia kollewe water companies in england and wales have been ordered to return 114m to customers through lower bills next year because progress on leakage

welcome to my world macmillan education - Oct 10 2021
web 2 days ago itv has exclusive broadcast rights to show the rugby world cup in the uk this match will be on itv1 read telegraph sport s analysis of the best tv
welcome to my world elvis presley album wikipedia - Aug 20 2022
web consultare utili recensioni cliente e valutazioni per welcome to my world english edition su amazon it consultare recensioni obiettive e imparziali sui prodotti fornite dagli utenti
amazon it recensioni clienti welcome to my world english - Jul 19 2022
web 266 pages 24 cm
welcome to my world english edition by johnny weir - Mar 15 2022
web featuring content from national geographic and ted the new edition of the four level integrated skills world english series brings amazing stories about our planet and
welcome to my world weir johnny 1984 author archive org - Jun 17 2022
web oct 22 2007 about welcome to my world song listen to elvis presley welcome to my world mp3 song welcome to my world song from the album the king is released on
september s full harvest moon is the last supermoon of the year - May 05 2021
web sep 26 2023 former white house aide cassidy hutchinson s new book enough paints the final days of the trump white house as even more chaotic than previously known
qué es la ansiedad cuáles son los síntomas cómo tratarla - Jan 01 2022
además los médicos deben descartar otros trastornos de salud mental que pueden causar síntomas similares tales como agorafobia agorafobia la agorafobia es la aparición de temor
enfermedades mentales medlineplus en español - Apr 04 2022
oct 10 2023 los factores que afectan la salud mental en ee uu según encuesta 1 52 cómo reconocer los síntomas de la ansiedad muchos de los síntomas de la ansiedad son
tratamiento de las enfermedades mentales trastornos de la - Nov 30 2021
30 abril 2020 clínica kahlo 0 comentarios en este artículo hablamos un poco de la historia de los trastornos de la personalidad a lo largo del tiempo hasta bien entrado el siglo xviii los
salud mental qué es normal y qué no mayo clinic - Jul 07 2022
aug 2 2021 las enfermedades o trastornos mentales son afecciones que impactan su pensamiento sentimientos estado de ánimo y comportamiento pueden ser ocasionales o
historia de los síntomas de los trastornos mentales uclea - Sep 21 2023

este libro trata de la historia de los principales síntomas de los trastornos mentales o sea de lo que llamamos psicopatología descriptiva basado en la investigación realizada durante los últimos 25 años abarca aproximadamente dos siglos de las fuentes primarias francesas

trastornos mentales qué es síntomas y tratamiento top doctors - May 05 2022

el trastorno mental no era un problema como cualquier otro causado por uno de los dioses sino causado por problemas en la relación entre el individuo y dios creían que el

clasificación y diagnóstico de las enfermedades mentales - Sep 09 2022

dec 13 2022 los síntomas característicos de cada enfermedad mental se detallan en el diagnostic and statistical manual of mental disorders dsm 5 manual diagnóstico y

trastornos mentales world health organization who - Dec 12 2022

en 1980 la asociación americana de psiquiatría publicó la tercera edición de diagnostic and statistical manual of mental disorders dsm iii en el que fue el primer intento de abordar el

cómo se han tratado las enfermedades mentales a lo - Jun 18 2023

oct 31 2022 algunos de los primeros puntos de vista de la enfermedad mental la vieron como la obra de espiras malvadas demonios dioses o brujas que tomaron el control de la

diagnóstico de los trastornos mentales el dsm 5 salud mental - Aug 08 2022

nov 19 2013 la salud mental tiene muchas alteraciones que se conocen como enfermedades o trastornos mentales que afectan a los procesos afectivos y cognitivos al estado de

la historia de los trastornos de la personalidad blog de psicología - Aug 28 2021

10 1 historia de enfermedad mental libretexts - Jul 19 2023

sep 7 2013 historia de los síntomas de los trastornos mentales la obra presenta magistralmente la historia de de los principales síntomas psiquiátricos y a través de ésta el

historia de los trastornos mentales academialab - Feb 02 2022

la evaluación médica mediante la anamnesis el examen físico y a menudo las neuroimágenes y los estudios de laboratorio 1 referencia de la evaluación los pacientes con síntomas

1 3 la historia de la enfermedad mental libretexts español - Nov 11 2022

de modo que la mayor parte del diagnóstico de los trastornos mentales se realiza con base en los síntomas que el paciente presenta ya que se acepta que la etiología de los trastornos

historia de los síntomas de los trastornos mentales la - May 17 2023

dec 13 2022 cambios en el deseo sexual exceso de enojo hostilidad o violencia pensamiento suicida a veces los síntomas de un trastorno de salud mental aparecen

1 4 la historia de la enfermedad mental libretexts español - Mar 15 2023

una de cada ocho personas en el mundo padece un trastorno mental los trastornos mentales comportan alteraciones considerables del pensamiento la regulación de las emociones o el

trastorno mental wikipedia la enciclopedia libre - Jan 13 2023

sobre la evidencia de la relativamente reciente preocupación de la salud pública por los problemas de salud mental se revisa la evolución del concepto de enfermedad mental en

historia de los síntomas de los trastornos mentales google books - Apr 16 2023

los trastornos mentales más comunes incluyen la depresión que afecta a unos 300 millones de personas en el mundo el trastorno bipolar unos 60 millones la demencia unos 50

evaluación médica del paciente con síntomas mentales - Oct 30 2021

la piedra de la locura inicios histÓricos de la - Oct 10 2022

dec 14 2021 puede haber un trastorno mental cuando los patrones o cambios en el pensamiento los sentimientos o el comportamiento causan angustia o alteran la capacidad

trastorno de ansiedad social trastornos de la salud mental - Sep 28 2021

enfermedad mental diagnóstico y tratamiento mayo clinic - Jun 06 2022

las alteraciones leves de estos aspectos vitales son frecuentes pero cuando provocan una angustia intensa a la persona afectada y o interfieren en su vida diaria se consideran

introducción a las enfermedades mentales trastornos de la - Mar 03 2022

los antiguos fármacos antipsicóticos antipsicóticos la esquizofrenia es un trastorno mental caracterizado por la existencia de pérdida de contacto con la realidad psicosis

historia de los sintomas de los trastornos - Aug 20 2023

historia de los principales síntomas psiquiátricos desde el siglo xix hasta nuestros días quizás te interese la situación de la salud mental en españa los objetivos de este estudio son

enfermedad mental síntomas y causas mayo clinic - Feb 14 2023

oct 30 2022 en roma el médico asclepiades 124 40 a c y el filósofo cicerón 106 43 a c rechazaron la idea de hipócrates de los cuatro humores y en su lugar afirmaron que la