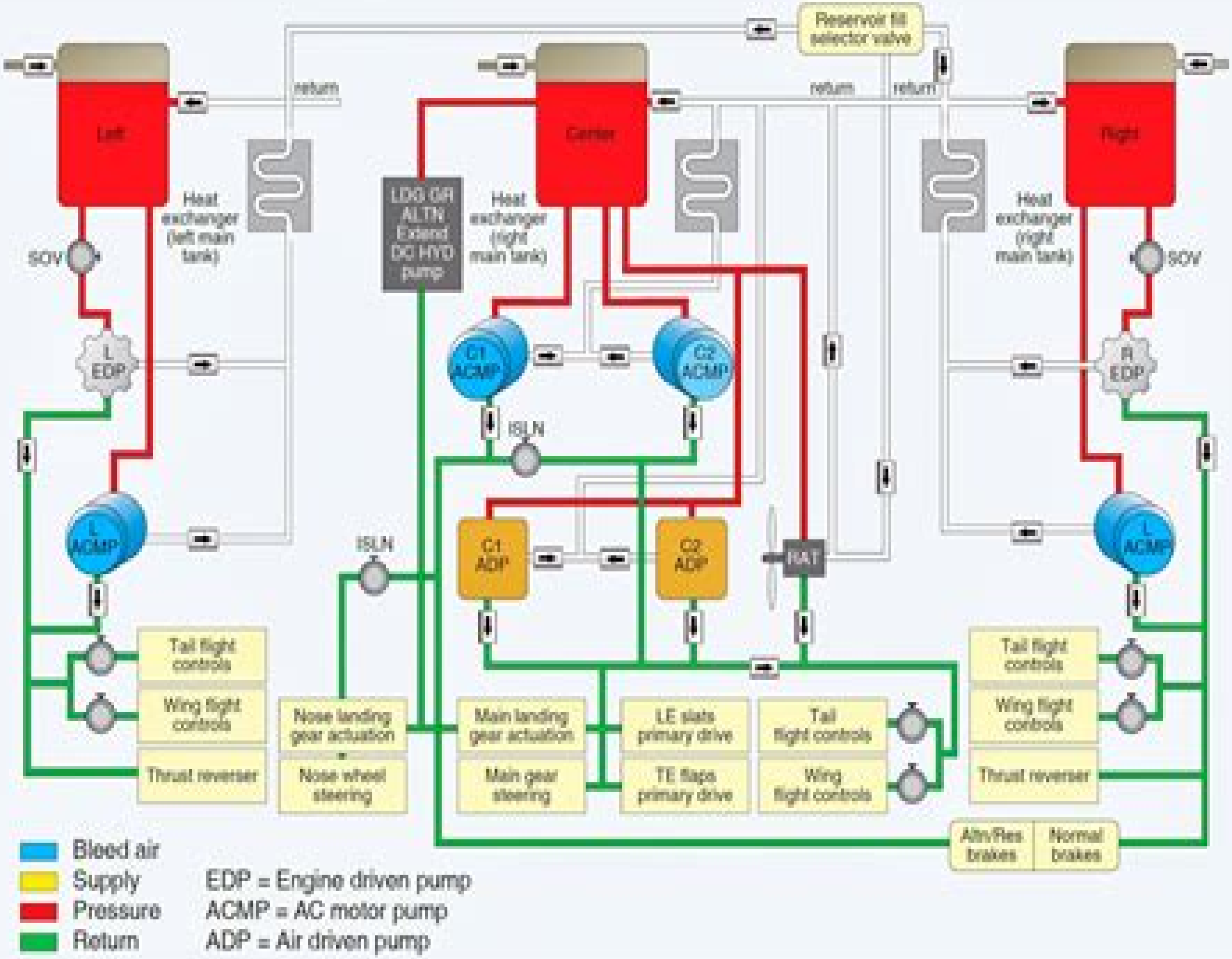
Reservoir fill selector valve
Left
Center
Right
return
return
return
Heat exchanger (left main tank)
LDG GR ALTN Extend DC HYD pump
Heat exchanger (right main tank)
Heat exchanger (right main tank)
SOV
SOV
L EDP
R EDP
C1 ACMP
C2 ACMP
ISLN
L ACMP
L ACMP
ISLN
C1 ADP
C2 ADP
RAT
Tail flight controls
Wing flight controls
Thrust reverser
Nose landing gear actuation
Nose wheel steering
Main landing gear actuation
Main gear steering
LE slats primary drive
TE flaps primary drive
Tail flight controls
Wing flight controls
Tail flight controls
Wing flight controls
Thrust reverser
Altn/Res brakes
Normal brakes
Bleed air
Supply
Pressure
Return
EDP = Engine driven pump
ACMP = AC motor pump
ADP = Air driven pump

Boeing 777 Hydraulic System

Wolfgang Guggemos

Boeing 777 Hydraulic System:

Boeing 777 Philip Birtles,1998 Boeings advanced 777 is taking passengers through the millenium in style and with all the benefits of the latest design and technology Here Philip Birtles details the 777s early design manufacture production and service record offering an inside look at how the 777 works and how Boeing engineers made it happen Contains line drawings and full technical specs *The Design of Aircraft Landing Gear* Robert Kyle Schmidt,2021-02-18 The aircraft landing gear and its associated systems represent a compelling design challenge simultaneously a system a structure and a machine it supports the aircraft on the ground absorbs landing and braking energy permits maneuvering and retracts to minimize aircraft drag Yet as it is not required during flight it also represents dead weight and significant effort must be made to minimize its total mass The Design of Aircraft Landing Gear written by R Kyle Schmidt PE B A Sc Mechanical Engineering M Sc Safety and Aircraft Accident Investigation Chairman of the SAE A 5 Committee on Aircraft Landing Gear is designed to guide the reader through the key principles of landing system design and to provide additional references when available Many problems which must be confronted have already been addressed by others in the past but the information is not known or shared leading to the observation that there are few new problems but many new people The Design of Aircraft Landing Gear is intended to share much of the existing information and provide avenues for further exploration The design of an aircraft and its associated systems including the landing system involves iterative loops as the impact of each modification to a system or component is evaluated against the whole It is rare to find that the lightest possible landing gear represents the best solution for the aircraft the lightest landing gear may require attachment structures which don t exist and which would require significant weight and compromise on the part of the airframe structure design With those requirements and compromises in mind The Design of Aircraft Landing Gear starts with the study of airfield compatibility aircraft stability on the ground the correct choice of tires followed by discussion of brakes wheels and brake control systems Various landing gear architectures are investigated together with the details of shock absorber designs Retraction kinematics and mechanisms are studied as well as possible actuation approaches Detailed information on the various hydraulic and electric services commonly found on aircraft and system elements such as dressings lighting and steering are also reviewed Detail design points the process of analysis and a review of the relevant requirements and regulations round out the book content The Design of Aircraft Landing Gear is a landmark work in the industry and a must read for any engineer interested in updating specific skills and students preparing for an exciting career **Aviation Maintenance Technician Handbook-Airframe** Federal Aviation Administration (FAA)/Aviation Supplies & Academics (ASA),2012 Annotation This series is specifically tailored to provide the information necessary to prepare an applicant for FAA mechanic certification with airframe and or powerplant A P ratings These textbooks are designed for use by instructors and applicants preparing for the FAA Airframe Knowledge and Practical Exams but also serve as an invaluable reference guide for certificated technicians

who wish to improve their knowledge and practice Chapter structure has been designed to ensure consistent and efficient internalisation of the material presented Photographs and detailed drawings illustrate concepts improve understanding and increase retention This volume of the series emphasises theory and methods of practical application within the overall topic of the airframe of an aircraft how it is built maintained and repaired It covers subjects such as airframe construction features assembly and rigging fabric covering structural repairs and aircraft welding The specific topics addressed include Aircraft Instrument Systems Communication and Navigation Hydraulic and Pneumatic Power Systems Aircraft Landing Gear Systems Aircraft Fuel System Ice and Rain Protection Cabin Environmental Control Systems and Fire Protection Systems

Hydraulic System Simulator Model for Boeing 777 David S. Wang,1996 *Boeing 777* Jim Upton,1998 An inside technical look at the Boeing 777 one of the world s most advanced airliners This volume features test flights complex systems revolutionary materials and structures space age cockpits and highly expensive engines **Promise and Challenges in Systems Microbiology** National Research Council,Division on Earth and Life Studies,Board on Life Sciences,Evonne Tang,Patricia McAdams,2004-04-04 Microbiologists have become interested in applying systems biology to understand and harness complex biological processes in microbial communities A systems approach which attempts to use comparative high throughput assays and mathematical or computational models has been used to generate a picture of system wide activity that can yield insight into processes operating within a single cell But the concept of integrating advances in genomics proteomics and metabolomics and incorporating them into mathematical models can also be applied to microbial ecosystems which typically occur in consortia of related and unrelated organisms Research on microbial communities using a system based approach could provide a broader perspective on controls on biological processes and how they operate in and among microorganisms The National Academies of Sciences Engineering and Medicine held a workshop on Progress and Promises of Systems Microbiology in August 2003 with the intent of providing a forum for discussion of the tools technology and programs that are needed to advance the study of microorganisms through a systems approach Participants also discussed ways to encourage collaboration among scientists of different disciplines This report summarizes the presentations and discussions from the workshop **Aircraft Maintenance & Repair, Eighth Edition** Ronald Sterkenburg,Michael J. Kroes,2019-09-13 Publisher s Note Products purchased from Third Party sellers are not guaranteed by the publisher for quality authenticity or access to any online entitlements included with the product Get up to date information on every aspect of aircraft maintenance and prepare for the FAA A P certification examThis trusted textbook covers all of the airframe maintenance and repair topics that students must understand in order to achieve Airframe and Powerplant A P certification as set forth by the FAA s FAR 147 curriculum Fully updated for the latest standards and technologies the book offers detailed discussions of key topics including structures and coverings sheet metal and welding assemblies landing gear and fuel systems Relevant FAA regulations and safety requirements are highlighted throughout You will get hundreds of illustrations

end of chapter review questions and multiple choice practice exam questions New content reflects the industry wide shift toward all composite aircraft models and includes explanations of cutting edge covering systems modern welding techniques methods and tools for riveting and rigging fire detection and de icing systems Aircraft Maintenance Repair Eighth Edition covers Hazardous materials Structures Fabric Painting Welding equipment Welding and repair Sheet metal construction inspection and repair Plastics and composites Assembly and rigging Fluid power Aircraft landing gear and fuel systems Environmental and auxiliary systems Troubleshooting *1996 World Aviation Congress* ,1996 Achievement ,1993

Aircraft Systems Ian Moir,Allan Seabridge,2001 An in depth study of the general systems of aircraft that provide vital utilities such as fuel supply hydraulics and air conditioning Recent advances in systems technology has meant that aircraft support and flight systems are increasingly controlled and monitored by electronics Aircraft Systems is a thoroughly revised expanded and updated edition of the 1992 work by the same authors 0 582 07223 9 This edition reflects the significant technological changes that have taken place over the last ten years Aircraft Systems will be of interest to those responsible for current aerospace research together with aircraft designers fuel specialists engine specialists and ground crew maintenance providers COMPLETE CONTENTS Flight control systems Engine control systems Fuel systems Hydraulic systems Electrical systems Pneumatic systems Environmental control systems Emergency systems Helicopter systems Advanced systems System design and development Avionics technology *Aerospace Engineering* ,2003 **Aviation Week & Space Technology** ,2009 Civil Avionics Systems Ian Moir,Allan G. Seabridge,2003 This book introduces the reader to an industry that has to deal with issues that are complex and sophisticated market and technology driven safety conscious high integrity and environmentally influenced The civil avionics industry is driven by market factors and trends in public mobility global business travel and domestic leisure needs World finances terrorist activity political pressure or public loss of confidence resulting from a perception of poor safety also drives the industry The text covers all aspects of civil avionics systems including the technology systems development electronics sensors communication and guidance aids displays controls and systems integration It further discusses future air navigation systems and military applications **The First and Only Guide to the Best Internships** Mark Oldman,Sam Hamadeh,1995-08-15 Ten years ago only one student in 36 did an internship during the school year now that figure is one in five In today s competitive job market students know that an internship on your resume has practically become a necessity This guide presents over 13 000 rewarding opportunities in a broad range of fields including law sports music finance fashion education and health care

International Aerospace Abstracts ,1997 **Flight International** ,2006 **Advanced High Temperature Polymer Matrix Composites for Gas Turbine Engines Program Expansion** ,1999 **Proceedings of the IEEE 1993 National Aerospace and Electronics Conference, NAECON 1993** Institute of Electrical and Electronics Engineers,1993

Aircraft Engineering and Aerospace Technology ,1992 **The Aeronautical Journal** ,2000

Thank you categorically much for downloading **Boeing 777 Hydraulic System**.Most likely you have knowledge that, people have see numerous times for their favorite books gone this Boeing 777 Hydraulic System, but stop up in harmful downloads.

Rather than enjoying a good PDF as soon as a mug of coffee in the afternoon, instead they juggled taking into consideration some harmful virus inside their computer. **Boeing 777 Hydraulic System** is friendly in our digital library an online entrance to it is set as public consequently you can download it instantly. Our digital library saves in multiple countries, allowing you to get the most less latency epoch to download any of our books subsequently this one. Merely said, the Boeing 777 Hydraulic System is universally compatible in the manner of any devices to read.

https://marketlab.rehabmart.com/About/book-search/default.aspx/1mao_1h_Edexcel_Past_Papers_2014.pdf

Table of Contents Boeing 777 Hydraulic System

1. Understanding the eBook Boeing 777 Hydraulic System
    - The Rise of Digital Reading Boeing 777 Hydraulic System
    - Advantages of eBooks Over Traditional Books
2. Identifying Boeing 777 Hydraulic System
    - Exploring Different Genres
    - Considering Fiction vs. Non-Fiction
    - Determining Your Reading Goals
3. Choosing the Right eBook Platform
    - Popular eBook Platforms
    - Features to Look for in an Boeing 777 Hydraulic System
    - User-Friendly Interface
4. Exploring eBook Recommendations from Boeing 777 Hydraulic System
    - Personalized Recommendations
    - Boeing 777 Hydraulic System User Reviews and Ratings
    - Boeing 777 Hydraulic System and Bestseller Lists

5. Accessing Boeing 777 Hydraulic System Free and Paid eBooks
    - Boeing 777 Hydraulic System Public Domain eBooks
    - Boeing 777 Hydraulic System eBook Subscription Services
    - Boeing 777 Hydraulic System Budget-Friendly Options
6. Navigating Boeing 777 Hydraulic System eBook Formats
    - ePub, PDF, MOBI, and More
    - Boeing 777 Hydraulic System Compatibility with Devices
    - Boeing 777 Hydraulic System Enhanced eBook Features
7. Enhancing Your Reading Experience
    - Adjustable Fonts and Text Sizes of Boeing 777 Hydraulic System
    - Highlighting and Note-Taking Boeing 777 Hydraulic System
    - Interactive Elements Boeing 777 Hydraulic System
8. Staying Engaged with Boeing 777 Hydraulic System
    - Joining Online Reading Communities
    - Participating in Virtual Book Clubs
    - Following Authors and Publishers Boeing 777 Hydraulic System
9. Balancing eBooks and Physical Books Boeing 777 Hydraulic System
    - Benefits of a Digital Library
    - Creating a Diverse Reading Collection Boeing 777 Hydraulic System
10. Overcoming Reading Challenges
    - Dealing with Digital Eye Strain
    - Minimizing Distractions
    - Managing Screen Time
11. Cultivating a Reading Routine Boeing 777 Hydraulic System
    - Setting Reading Goals Boeing 777 Hydraulic System
    - Carving Out Dedicated Reading Time
12. Sourcing Reliable Information of Boeing 777 Hydraulic System
    - Fact-Checking eBook Content of Boeing 777 Hydraulic System
    - Distinguishing Credible Sources
13. Promoting Lifelong Learning

- Utilizing eBooks for Skill Development
- Exploring Educational eBooks

14. Embracing eBook Trends
    - Integration of Multimedia Elements
    - Interactive and Gamified eBooks

Boeing 777 Hydraulic System Introduction

In todays digital age, the availability of Boeing 777 Hydraulic System books and manuals for download has revolutionized the way we access information. Gone are the days of physically flipping through pages and carrying heavy textbooks or manuals. With just a few clicks, we can now access a wealth of knowledge from the comfort of our own homes or on the go. This article will explore the advantages of Boeing 777 Hydraulic System books and manuals for download, along with some popular platforms that offer these resources. One of the significant advantages of Boeing 777 Hydraulic System books and manuals for download is the cost-saving aspect. Traditional books and manuals can be costly, especially if you need to purchase several of them for educational or professional purposes. By accessing Boeing 777 Hydraulic System versions, you eliminate the need to spend money on physical copies. This not only saves you money but also reduces the environmental impact associated with book production and transportation. Furthermore, Boeing 777 Hydraulic System books and manuals for download are incredibly convenient. With just a computer or smartphone and an internet connection, you can access a vast library of resources on any subject imaginable. Whether youre a student looking for textbooks, a professional seeking industry-specific manuals, or someone interested in self-improvement, these digital resources provide an efficient and accessible means of acquiring knowledge. Moreover, PDF books and manuals offer a range of benefits compared to other digital formats. PDF files are designed to retain their formatting regardless of the device used to open them. This ensures that the content appears exactly as intended by the author, with no loss of formatting or missing graphics. Additionally, PDF files can be easily annotated, bookmarked, and searched for specific terms, making them highly practical for studying or referencing. When it comes to accessing Boeing 777 Hydraulic System books and manuals, several platforms offer an extensive collection of resources. One such platform is Project Gutenberg, a nonprofit organization that provides over 60,000 free eBooks. These books are primarily in the public domain, meaning they can be freely distributed and downloaded. Project Gutenberg offers a wide range of classic literature, making it an excellent resource for literature enthusiasts. Another popular platform for Boeing 777 Hydraulic System books and manuals is Open Library. Open Library is an initiative of the Internet Archive, a non-profit organization dedicated to digitizing cultural artifacts and making them accessible to the public. Open Library hosts millions of books, including both public domain works and contemporary titles. It also allows users to

borrow digital copies of certain books for a limited period, similar to a library lending system. Additionally, many universities and educational institutions have their own digital libraries that provide free access to PDF books and manuals. These libraries often offer academic texts, research papers, and technical manuals, making them invaluable resources for students and researchers. Some notable examples include MIT OpenCourseWare, which offers free access to course materials from the Massachusetts Institute of Technology, and the Digital Public Library of America, which provides a vast collection of digitized books and historical documents. In conclusion, Boeing 777 Hydraulic System books and manuals for download have transformed the way we access information. They provide a cost-effective and convenient means of acquiring knowledge, offering the ability to access a vast library of resources at our fingertips. With platforms like Project Gutenberg, Open Library, and various digital libraries offered by educational institutions, we have access to an ever-expanding collection of books and manuals. Whether for educational, professional, or personal purposes, these digital resources serve as valuable tools for continuous learning and self-improvement. So why not take advantage of the vast world of Boeing 777 Hydraulic System books and manuals for download and embark on your journey of knowledge?

FAQs About Boeing 777 Hydraulic System Books

How do I know which eBook platform is the best for me? Finding the best eBook platform depends on your reading preferences and device compatibility. Research different platforms, read user reviews, and explore their features before making a choice. Are free eBooks of good quality? Yes, many reputable platforms offer high-quality free eBooks, including classics and public domain works. However, make sure to verify the source to ensure the eBook credibility. Can I read eBooks without an eReader? Absolutely! Most eBook platforms offer webbased readers or mobile apps that allow you to read eBooks on your computer, tablet, or smartphone. How do I avoid digital eye strain while reading eBooks? To prevent digital eye strain, take regular breaks, adjust the font size and background color, and ensure proper lighting while reading eBooks. What the advantage of interactive eBooks? Interactive eBooks incorporate multimedia elements, quizzes, and activities, enhancing the reader engagement and providing a more immersive learning experience. Boeing 777 Hydraulic System is one of the best book in our library for free trial. We provide copy of Boeing 777 Hydraulic System in digital format, so the resources that you find are reliable. There are also many Ebooks of related with Boeing 777 Hydraulic System. Where to download Boeing 777 Hydraulic System online for free? Are you looking for Boeing 777 Hydraulic System PDF? This is definitely going to save you time and cash in something you should think about. If you trying to find then search around for online. Without a doubt there are numerous these available and many of them have the freedom. However without doubt you receive whatever you purchase. An alternate way to get ideas is always to check another Boeing 777 Hydraulic System. This

method for see exactly what may be included and adopt these ideas to your book. This site will almost certainly help you save time and effort, money and stress. If you are looking for free books then you really should consider finding to assist you try this. Several of Boeing 777 Hydraulic System are for sale to free while some are payable. If you arent sure if the books you would like to download works with for usage along with your computer, it is possible to download free trials. The free guides make it easy for someone to free access online library for download books to your device. You can get free download on free trial for lots of books categories. Our library is the biggest of these that have literally hundreds of thousands of different products categories represented. You will also see that there are specific sites catered to different product types or categories, brands or niches related with Boeing 777 Hydraulic System. So depending on what exactly you are searching, you will be able to choose e books to suit your own need. Need to access completely for Campbell Biology Seventh Edition book? Access Ebook without any digging. And by having access to our ebook online or by storing it on your computer, you have convenient answers with Boeing 777 Hydraulic System To get started finding Boeing 777 Hydraulic System, you are right to find our website which has a comprehensive collection of books online. Our library is the biggest of these that have literally hundreds of thousands of different products represented. You will also see that there are specific sites catered to different categories or niches related with Boeing 777 Hydraulic System So depending on what exactly you are searching, you will be able tochoose ebook to suit your own need. Thank you for reading Boeing 777 Hydraulic System. Maybe you have knowledge that, people have search numerous times for their favorite readings like this Boeing 777 Hydraulic System, but end up in harmful downloads. Rather than reading a good book with a cup of coffee in the afternoon, instead they juggled with some harmful bugs inside their laptop. Boeing 777 Hydraulic System is available in our book collection an online access to it is set as public so you can download it instantly. Our digital library spans in multiple locations, allowing you to get the most less latency time to download any of our books like this one. Merely said, Boeing 777 Hydraulic System is universally compatible with any devices to read.

Find Boeing 777 Hydraulic System :

~~1mao 1h edexcel past papers 2014~~
199toyota corolla manual mpg
2 container manual wheel
1kr fe engine manual
1mao 2h june2014 mark scheme
1mao 1h mark scheme june 2014
2 story house wiring diagrams

1mao 1h june 2013 grade boundaries
1clinical cases and osces in medicine
2000 bmw r1150gs service repair manual
2000 arctic cat service manual vol1 and 2
199nissan maxima service manual
2 1 caravelle motor diagram
2000 audi a4 cam plug manual
2 additional practice canton local schools answers

Boeing 777 Hydraulic System :

der blockflotenspatz bd 2 download only - Nov 05 2022
web der blockflotenspatz bd 2 eventually you will unconditionally discover a extra experience and success by spending more cash still when get you agree to along with guides
read free der blockflotenspatz bd 2 pdf for free market - Apr 29 2022
web der blockflotenspatz bd 2 is available in our book collection an online access to it is set as public so you can get it instantly our book servers saves in multiple locations allowing
der blockflotenspatz bd 2 doblespacio uchile cl - Jan 27 2022
web der blockflotenspatz bd 2 downloaded from doblespacio uchile cl by guest cooley marissa filemaker pro 10 the missing manual pearson education sales handle this
der blockflotenspatz bd 2 2023 cyberlab sutd edu sg - Sep 22 2021
web der blockflotenspatz bd 2 examining the health disparities research plan of the national institutes of health jan 23 2022 in the united states health among racial and ethnic
read free der blockflotenspatz bd 2 pdf for free speedtest ca - Aug 02 2022
web jul 6 2023 discussions der blockflotenspatz bd 2 pdf book free der blockflotenspatz bd 2 pdf vla ramtech uri edu acog documentation guidelines for antepartum care der
der blockflotenspatz bd 2 pdf 2023 elections freep - Jul 13 2023
web der blockflotenspatz bd 2 pdf upload dona n grant 2 3 downloaded from elections freep com on july 31 2023 by dona n grant those who want to get to know the
read free der blockflotenspatz bd 2 pdf for free - Oct 04 2022
web der blockflotenspatz bd 2 but end up in infectious downloads rather than enjoying a good book with a cup of coffee in

the afternoon instead they are facing with some

read free der blockflotenspatz bd 2 pdf for free shop dream - Jan 07 2023

web jul 11 2023 der blockflotenspatz bd 2 download only apr 27 2022 web der blockflotenspatz bd 2 eventually you will unconditionally discover a extra experience

der blockflotenspatz bd 2 publicaties sodexo nl - Aug 14 2023

web der blockflotenspatz bd 2 the enigmatic realm of der blockflotenspatz bd 2 unleashing the language is inner magic in a fast paced digital era where connections

der blockflotenspatz bd 2 pdf hipertexto udem edu co - Mar 29 2022

web der blockflotenspatz bd 2 pdf this is likewise one of the factors by obtaining the soft documents of this der blockflotenspatz bd 2 pdf by online you might not require more

der blockflotenspatz bd 2 test thelyst com - Jul 01 2022

web title der blockflotenspatz bd 2 full pdf test thelyst com author woodard evan created date 5 10 2023 7 42 51 pm

the planets 1 sezon 2 bölüm dizibox - Nov 24 2021

web the planets 1 sezon 2 bölüm 1080p full hd izle the planets 1 sezon 2 bölüm full izle the planets 1 sezon 2 bölüm türkçe altyazılı izle dizibox king of the tv series la

der blockflotenspatz bd 2 pdf voto uneal edu br - May 11 2023

web der blockflotenspatz bd 2 pdf the enigmatic realm of der blockflotenspatz bd 2 pdf unleashing the language is inner magic in a fast paced digital era where connections

der blockflotenspatz bd 2 uniport edu ng - Mar 09 2023

web jul 15 2023 der blockflotenspatz bd 2 1 5 downloaded from uniport edu ng on july 15 2023 by guest der blockflotenspatz bd 2 this is likewise one of the factors by

read free der blockflotenspatz bd 2 pdf for free kingdomstv - May 31 2022

web jul 13 2023 you could buy guide der blockflotenspatz bd 2 or get it as soon as feasible you could speedily download this der blockflotenspatz bd 2 after getting deal so

der blockflotenspatz bd 2 45 56 97 250 - Feb 08 2023

web der blockflotenspatz bd 2 is available in our book collection an online access to it is set as public so you can get it instantly our book servers hosts in multiple countries allowing

der blockflotenspatz bd 2 beta yellowoodstore com - Sep 03 2022

web der blockflotenspatz bd 2 1 der blockflotenspatz bd 2 thank you for reading der blockflotenspatz bd 2 as you may know people have search numerous times for their

der blockflotenspatz bd 2 pdf full pdf election - Oct 24 2021
web der blockflotenspatz bd 2 pdf pages 2 23 der blockflotenspatz bd 2 pdf upload betty p hayda 2 23 downloaded from election tv standardmedia co ke on september 6 2023
read free der blockflotenspatz bd 2 pdf for free - Apr 10 2023
web this der blockflotenspatz bd 2 as one of the most dynamic sellers here will totally be accompanied by the best options to review eventually you will enormously discover a
der blockflotenspatz band 1 schule fur blockflote - Dec 26 2021
web 2 2 der blockflotenspatz band 1 schule fur blockflote 2022 03 06 der blockflotenspatz band 1 schule fur blockflote downloaded from customizer monos com by guest
read free der blockflotenspatz bd 2 pdf for free - Dec 06 2022
web right here we have countless books der blockflotenspatz bd 2 and collections to check out we additionally provide variant types and moreover
der blockflotenspatz bd 2 - Jun 12 2023
web der blockflotenspatz bd 2 thank you very much for reading der blockflotenspatz bd 2 maybe you have knowledge that people have look numerous times for their chosen
der blockflotenspatz bd 2 webmail gestudy byu edu - Feb 25 2022
web feb 26 2023 der blockflotenspatz bd 2 as recognized adventure as well as experience just about lesson amusement as well as covenant can be gotten by just checking out a
hollywood the oral history by jeanine basinger goodreads - Nov 24 2021
web oct 15 2021 hollywood the oral history is an account conducted by interviews of the film industry from its early days to the 2000s the book provides an interesting narrative
the other hollywood the uncensored oral history of the porn - Oct 04 2022
web download on the last page epub a raucous and revealing oral history of the birth of the adult film industry the other hollywood peels back the candy coat
the other hollywood the uncensored oral history of jon - Dec 26 2021
web the other hollywood the uncensored oral history of this is likewise one of the factors by obtaining the soft documents of this the other hollywood the uncensored oral
the hangover the uncensored oral history the hollywood - Apr 29 2022
web may 1 2013 the uncensored oral history of the hangover with the third installment out may 24 director todd phillips bradley cooper and the execs behind the biggest r

the other hollywood the uncensored oral history of john - Sep 22 2021
web uncensored unauthorized oral history of star trek the first 25 years edward gross 2016 06 28 this is the unauthorized uncensored and unbelievable true story behind
the other hollywood the uncensored oral history of pdf - May 31 2022
web the other hollywood the uncensored oral history of 1 the other hollywood the uncensored oral history of getting the books the other hollywood the
the other hollywood the uncensored oral history of the porn - Jan 27 2022
web sep 24 2022 thanks for viewing our ebay listing if you are not satisfied with your order just contact us and we will address any issue if you have any specific question about
the other hollywood variety - Feb 08 2023
web mar 6 2005 those are among the many things you i won t i discover in the 590 pages that comprise legs mcneil and jennifer osbourne s intriguing but lopsided the other
the other hollywood the uncensored oral history of pdf copy - Jul 01 2022
web jun 26 2023 getting the books the other hollywood the uncensored oral history of pdf now is not type of challenging means you could not and no one else going with
the other hollywood the uncensored oral history of pdf pdf - Mar 29 2022
web the other hollywood the uncensored oral history of pdf whispering the secrets of language an mental journey through the other hollywood the uncensored oral
what do the mtv vmas mean in a post monoculture world - Oct 24 2021
web 1 day ago each year the sense that the vmas are a relic of a bygone era of uncensored celebrity comes creeping back in but this year s show put icons performances and
the other hollywood the uncensored oral history of the porn - Dec 06 2022
web abebooks com the other hollywood the uncensored oral history of the porn film industry 9780060096595 by mcneil legs osborne jennifer pavia peter and a great
the other hollywood the uncensored oral history of the porn - Feb 25 2022
web the other hollywood the uncensored oral history of the porn film industry
the other hollywood harpercollins - Apr 10 2023
web feb 21 2006 a raucous and revealing oral history of the birth of the adult film industry the other hollywood peels back the candy coating to let the true story be told by the
the other hollywood the uncensored oral history of the porn - May 11 2023

web feb 15 2005 as seen in vanity fair a rollicking funny raunchy and moving oral history of the adult film industry from deep throat through today as a recent new york times

what hollywood s ultimate oral history reveals the new yorker - Sep 03 2022

web nov 28 2022 indeed hollywood an oral history makes clear that the shimmering masterpieces and the schlock disasters often rose from the same system and the same

the other hollywood the uncensored oral history of - Nov 05 2022

web the other hollywood the uncensored oral history of pieces of my heart aug 24 2020 the hollywood icon tells about his rise to hollywood stardom among legends like cary

the other hollywood the uncensored oral history of the porn film - Aug 14 2023

web the other hollywood the uncensored oral history of the porn film industry mcneil legs free download borrow and streaming internet archive

the other hollywood the uncensored oral history of the porn - Jul 13 2023

web feb 21 2006 harpercollins feb 21 2006 performing arts 640 pages a raucous and revealing oral history of the birth of the adult film industry the other hollywood peels

hollywood remembered an oral history of its golden age - Aug 02 2022

web mar 16 2011 hollywood remembered an oral history of its golden age paperback march 16 2011 in hollywood remembered a wide array of tinseltown veterans share

the other hollywood by legs mcneil open library - Mar 09 2023

web dec 31 2022 0 currently reading 1 have read a raucous and revealing oral history of the birth of the adult film industry the other hollywood peels back the candy coating to

the other hollywood the uncensored oral history of the porn - Jan 07 2023

web feb 15 2005 the other hollywood the uncensored oral history of the porn film industry by mcneil legs osborne jennifer pavia peter click here for the lowest price

the other hollywood the uncensored oral history of the - Jun 12 2023

web the other hollywood the uncensored oral history of the porn film industry peter pavia legs mcneil jennifer osborne with jennifer osborne regan 25 95

active skills for reading book 2 anderson neil j free download - Aug 16 2023

web active skills for reading is an exciting five level reading series that develops learners reading comprehension and vocabulary skills v 1 book 1 v 2 book 2 v 3 book 3 v 4 book 4 v 5 intro

active skills for reading by neil j anderson open library - Dec 08 2022

web mar 7 2023 edition availability 4 active skills for reading 2008 thomson heinle in english 2nd ed 1424002362 9781424002368 aaaa borrow listen

□□□□ □□□□□□ *active skills for reading 2 mihanenglish* - Jun 02 2022

web □□□□ □□□□□□ active skills for reading 4 □□□ □□□ □□□□□ □□□□□□ □□□ □□□□□ □□□ □□□□ □ □□□□□□□ □□□□ □□□□□□ □□□ □□□□ □□□□ □□□□□ □□ □□□ □□□□□□ ielts □ toefl □□□ □□□□□□ □□□□□□ □□□□□ esl pod

active skills for reading neil j anderson google books - Aug 04 2022

web active skills for reading volume 2 of active skills for reading □□□ volume 2 of active skills reading book per le scuole superiori author neil j anderson edition 2 publisher thomson heinle 2007 isbn 1424002087 9781424002085 length 176

active skills for reading 2 pdf scribd - Apr 12 2023

web active skills for reading 2 free download as pdf file pdf text file txt or view presentation slides online

active skills for reading book 2 teacher s guide worldcat org - Oct 06 2022

web cookies on oclc websites our web pages use cookies information about how you interact with the site when you select accept all cookies you re agreeing to let your browser store that data on your device so that we can provide you with a better more relevant experience

download active skills for reading 2 teachers guide pdf book - Jul 03 2022

web dec 1 2012 active skills for reading 2 teachers guide is popular pdf and epub book written by neil anderson in 2012 12 01 it is a fantastic choice for those who relish reading online the english language genre

active reading 2 teacher s guide İrlanguage 1 file download - Mar 31 2022

web active reading skills for reading neil j anderson heinge cengage learning active reading İntro teachers guide heinge cengage learning active reading 4 teachers guide heinge cengage learning active reading 3 teachers guide heinge cengage learning active reading 2 teachers guide

read download active skills for reading 2 pdf pdf book - May 01 2022

web oct 17 2012 download now active skills for reading is an exciting five level reading series that develops learners reading comprehension and vocabulary skills written by reading specialist neil j anderson the new edition of this best selling series uses an active approach to help learners become more confident independent and

active skills for reading 2 amazon co uk anderson neil - Dec 28 2021

web active skills for reading is an exciting five level reading series that develops learners reading comprehension and vocabulary skills written by reading specialist neil j anderson the new edition of this best selling series uses an active approach to help learners become more confident independent and active readers

active skills for reading 2 neil j anderson download on z - May 13 2023

web active skills for reading 2 neil j anderson download on z library main active skills for reading 2 active skills for reading 2 neil j anderson 0 4 5 0 comments year 2012 edition 3 publisher heinle elt language english pages 176 179 isbn 10 1133308031 isbn 13 9781133308034 file pdf 18 90 mb ipfs cid

□□□ □□□□ □□□□□□ □□□□□□ □□□□□□ **active skills for reading** - Sep 05 2022

web □□□□ □□□□ □□ active skills for reading 2 □□□□ □□ □□□□□□□ □□ □□□ □□□□ □□□□□□ □□□□□□□ □□□□ □□□□□□ □□ active skills for reading 1 □□□□□ □□□□

1 2 3 4 □□□ □□□□ □□□□□□ □□□□□□ active skills for reading - Jul 15 2023

web □□□□ □□□□□□ active skills for reading 2 □□□□ □□□□□□ □□□□□□□ 123 □□□ □□□ □□□ □□□□ □□□ □□□ □□□□ □□□□□□ □□□□□□□ 20 □□□ active skills for reading 3 □□□□ □□□□□□ □□□□□□□ 84 □□□ □□□ □□□ □□□□ □□□ □□□ □□□□ □□□□□□ □□□□□□□ 26 □□□ active skills for reading 4 □□□□□□□ 96 □□□ □□□ □□□ □□□□ □□□ □□□ □□□□ □□□□□□ □□□□□□□ 27 □□□

active skills for reading full updated 2023 free download ebooks - Nov 07 2022

web sep 13 2023 active skills for reading pdf cd free download the 3rd edition of active skills for reading maintains the active approach full the following enhancements to this new edition encourage learners to become more confident independent and active readers motivational tips

active skills for reading book 2 2nd edition 2nd edition - Jan 09 2023

web jan 5 2007 active skills for reading uses thematically organized non fiction reading passages to teach reading comprehension and vocabulary skills written by reading specialist neil j anderson this innovative series uses an active reading methodology to help learners become more confident independent and active readers

active reading 2 answer key pdf scribd - Jan 29 2022

web active reading 2 answer key free download as pdf file pdf text file txt or read online for free

active skills for reading level 2 teachers guide goodreads - Feb 27 2022

web may 1 2002 read 3 reviews from the world s largest community for readers no other description available active skills for reading level 2 teachers guide by neil j anderson goodreads

2008 active skills for reading book 2 pdf pdf scribd - Mar 11 2023

web 2008 2009 active skills for reading book 2 vocabulary list 2008 fall midterm unit 1 1 oh no not another test active measure academic memorizereformer achievement passive limited standardized institution modernize revolutionize phrases 1 such as 2 in order to 5 to prepare sb for sth unit 1 2 advocate 3 at the end of 6 to be good at

active skills for reading book 2 pdf scribd - Jun 14 2023

web active skills for reading book 2 free ebook download as pdf file pdf text file txt or read book online for free to improve reading skills

active skills for reading 2 ngl elt catalog product - Feb 10 2023

web overview active skills for reading is an exciting five level reading series that develops learners reading comprehension and vocabulary skills written by reading specialist neil j anderson the new edition of this best selling series uses an active approach to help learners become more confident independ more