6. Battery hazard prevention

- Battery electrolyte contains sulphuric acid and can quickly burn the skin and eat holes in clothing. If you spill acid on yourself, immediately flush the area with water.
- Battery acid could cause blindness if splashed into the eyes. If acid gets into the eyes, flush them immediately with large quantities of water and see a doctor at once.
- If you accidentally drink acid, drink a large quantity of water or milk, beaten egg or vegetable oil. Call a doctor or hospital immediately.
- When working with batteries **ALWAYS** wear safety glasses or goggles.
- Batteries generate hydrogen gas. Hydrogen gas is very **EXPLOSIVE**, and is easily ignited with a small spark or flame.
- Before working with batteries, turn the starter switch to the **OFF** position, and the battery main switch must be turned **OFF**.
- Avoid short-circuiting the battery terminals through accidental contact with metallic objects, such as tools, across the terminals.
- When removing or installing, check which is the positive (+) and negative (-) terminal.
  Removing the batteries (see figure):
  1. Disconnect (-) terminal connected to the earth point.
  2. Disconnect the battery cable between the batteries.
  3. Disconnect (-) terminal connected to the starter.

  When installing, [illegible] separate order.
- Tighten the battery caps securely.
- When removing any battery cap, wear rubber gloves to prevent electrolyte contact with the skin.
- Tighten the battery terminals securely, check that the terminals are not loose by trying to move the battery cables by hand. Loosened terminals can generate sparks and lead to an explosion.

- Emergency STOP button - use only in emergency situations, health and life hazards.

WARNING

Never turn the battery main switch to the off position when engine is running, this can lead to damage to the electronic system of the machine.

Division Copy - Not for Resale - Expires 05-15-2019

Product plates

With the aid of the product plates shown below it is possible to identify the machine and its components. The product identification number (PIN) indicates the model designation engine code and serial number of the machine. the component identification number (CIN) indicates the serial number of the component.

When ordering spare parts and in all telephone enquiries or correspondense the PIN and CIN must aways be quoted.

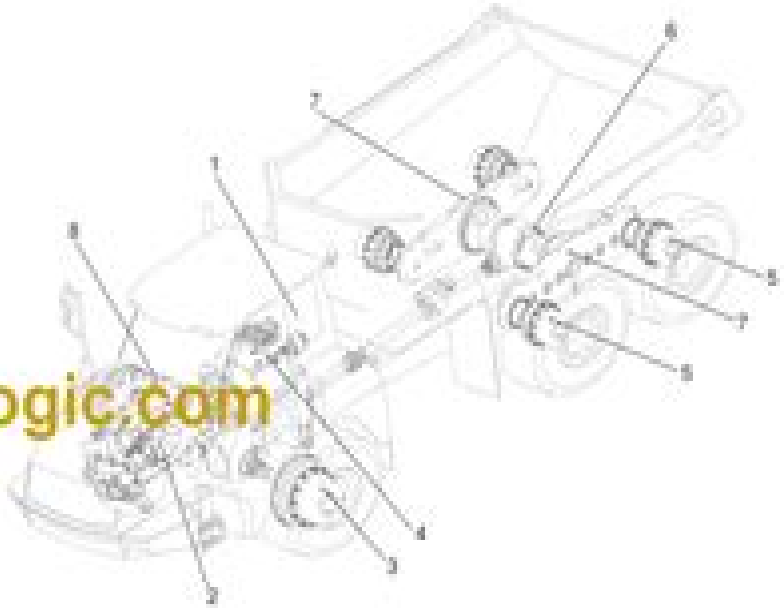

1. Product plate with Product identification Number, PIN and model/type number for complete machine, as well as the manufacturer's name and address. The plate is located on the right side of dumper of the front of rear frame.

2. The engine type designation , part and serial number. The plate is located on the left side on front of engine.

3. The transmission type designation and serial number. The plate is located on the top of transmission.

4. The part and serial numbers ,name of supplier and date of manufacture.The plate is locates on the top of front hub.

5. The part and serial numbers ,name of supplier and date of manufacture.The plate is locates on the top of rear hub.

6. The part and serial numbers ,name of supplier and date of manufacture.The plate is locates on the rear differential.

7. The part and serial numbers ,name of supplier and date of manufacture.The plate is locates on the bogie.

8. Cab type, and serial number. ROPS/FOPS number are located on the front seat of cab.

Division Copy - Not for Resale - Expires 05-15-2019

machinecatalogic.com

Da40 Operating Manual

Lingjun Ying

Da40 Operating Manual:

Unveiling the Power of Verbal Beauty: An Mental Sojourn through **Da40 Operating Manual**

In a world inundated with displays and the cacophony of instantaneous conversation, the profound energy and emotional resonance of verbal beauty usually disappear into obscurity, eclipsed by the regular barrage of noise and distractions. Yet, located within the musical pages of **Da40 Operating Manual**, a charming function of fictional elegance that impulses with natural thoughts, lies an unforgettable journey waiting to be embarked upon. Published by way of a virtuoso wordsmith, this exciting opus guides viewers on an emotional odyssey, lightly exposing the latent possible and profound affect embedded within the elaborate web of language. Within the heart-wrenching expanse of the evocative evaluation, we shall embark upon an introspective exploration of the book is central styles, dissect its captivating writing design, and immerse ourselves in the indelible impact it leaves upon the depths of readers souls.

https://marketlab.rehabmart.com/files/browse/Download_PDFS/how%20to%20lie%20with%20maps.pdf

Table of Contents Da40 Operating Manual

1. Understanding the eBook Da40 Operating Manual
    - The Rise of Digital Reading Da40 Operating Manual
    - Advantages of eBooks Over Traditional Books
2. Identifying Da40 Operating Manual
    - Exploring Different Genres
    - Considering Fiction vs. Non-Fiction
    - Determining Your Reading Goals
3. Choosing the Right eBook Platform
    - Popular eBook Platforms
    - Features to Look for in an Da40 Operating Manual
    - User-Friendly Interface
4. Exploring eBook Recommendations from Da40 Operating Manual
    - Personalized Recommendations

    - Da40 Operating Manual User Reviews and Ratings
    - Da40 Operating Manual and Bestseller Lists
5. Accessing Da40 Operating Manual Free and Paid eBooks
    - Da40 Operating Manual Public Domain eBooks
    - Da40 Operating Manual eBook Subscription Services
    - Da40 Operating Manual Budget-Friendly Options
6. Navigating Da40 Operating Manual eBook Formats
    - ePub, PDF, MOBI, and More
    - Da40 Operating Manual Compatibility with Devices
    - Da40 Operating Manual Enhanced eBook Features
7. Enhancing Your Reading Experience
    - Adjustable Fonts and Text Sizes of Da40 Operating Manual
    - Highlighting and Note-Taking Da40 Operating Manual
    - Interactive Elements Da40 Operating Manual
8. Staying Engaged with Da40 Operating Manual
    - Joining Online Reading Communities
    - Participating in Virtual Book Clubs
    - Following Authors and Publishers Da40 Operating Manual
9. Balancing eBooks and Physical Books Da40 Operating Manual
    - Benefits of a Digital Library
    - Creating a Diverse Reading Collection Da40 Operating Manual
10. Overcoming Reading Challenges
    - Dealing with Digital Eye Strain
    - Minimizing Distractions
    - Managing Screen Time
11. Cultivating a Reading Routine Da40 Operating Manual
    - Setting Reading Goals Da40 Operating Manual
    - Carving Out Dedicated Reading Time
12. Sourcing Reliable Information of Da40 Operating Manual
    - Fact-Checking eBook Content of Da40 Operating Manual

    - Distinguishing Credible Sources
13. Promoting Lifelong Learning
    - Utilizing eBooks for Skill Development
    - Exploring Educational eBooks
14. Embracing eBook Trends
    - Integration of Multimedia Elements
    - Interactive and Gamified eBooks

Da40 Operating Manual Introduction

In this digital age, the convenience of accessing information at our fingertips has become a necessity. Whether its research papers, eBooks, or user manuals, PDF files have become the preferred format for sharing and reading documents. However, the cost associated with purchasing PDF files can sometimes be a barrier for many individuals and organizations. Thankfully, there are numerous websites and platforms that allow users to download free PDF files legally. In this article, we will explore some of the best platforms to download free PDFs. One of the most popular platforms to download free PDF files is Project Gutenberg. This online library offers over 60,000 free eBooks that are in the public domain. From classic literature to historical documents, Project Gutenberg provides a wide range of PDF files that can be downloaded and enjoyed on various devices. The website is user-friendly and allows users to search for specific titles or browse through different categories. Another reliable platform for downloading Da40 Operating Manual free PDF files is Open Library. With its vast collection of over 1 million eBooks, Open Library has something for every reader. The website offers a seamless experience by providing options to borrow or download PDF files. Users simply need to create a free account to access this treasure trove of knowledge. Open Library also allows users to contribute by uploading and sharing their own PDF files, making it a collaborative platform for book enthusiasts. For those interested in academic resources, there are websites dedicated to providing free PDFs of research papers and scientific articles. One such website is Academia.edu, which allows researchers and scholars to share their work with a global audience. Users can download PDF files of research papers, theses, and dissertations covering a wide range of subjects. Academia.edu also provides a platform for discussions and networking within the academic community. When it comes to downloading Da40 Operating Manual free PDF files of magazines, brochures, and catalogs, Issuu is a popular choice. This digital publishing platform hosts a vast collection of publications from around the world. Users can search for specific titles or explore various categories and genres. Issuu offers a seamless reading experience with its user-friendly interface and allows users to download PDF files for offline reading. Apart from dedicated platforms, search engines also play a crucial role in finding free PDF files. Google, for instance, has an advanced search

feature that allows users to filter results by file type. By specifying the file type as "PDF," users can find websites that offer free PDF downloads on a specific topic. While downloading Da40 Operating Manual free PDF files is convenient, its important to note that copyright laws must be respected. Always ensure that the PDF files you download are legally available for free. Many authors and publishers voluntarily provide free PDF versions of their work, but its essential to be cautious and verify the authenticity of the source before downloading Da40 Operating Manual. In conclusion, the internet offers numerous platforms and websites that allow users to download free PDF files legally. Whether its classic literature, research papers, or magazines, there is something for everyone. The platforms mentioned in this article, such as Project Gutenberg, Open Library, Academia.edu, and Issuu, provide access to a vast collection of PDF files. However, users should always be cautious and verify the legality of the source before downloading Da40 Operating Manual any PDF files. With these platforms, the world of PDF downloads is just a click away.

FAQs About Da40 Operating Manual Books

How do I know which eBook platform is the best for me? Finding the best eBook platform depends on your reading preferences and device compatibility. Research different platforms, read user reviews, and explore their features before making a choice. Are free eBooks of good quality? Yes, many reputable platforms offer high-quality free eBooks, including classics and public domain works. However, make sure to verify the source to ensure the eBook credibility. Can I read eBooks without an eReader? Absolutely! Most eBook platforms offer web-based readers or mobile apps that allow you to read eBooks on your computer, tablet, or smartphone. How do I avoid digital eye strain while reading eBooks? To prevent digital eye strain, take regular breaks, adjust the font size and background color, and ensure proper lighting while reading eBooks. What the advantage of interactive eBooks? Interactive eBooks incorporate multimedia elements, quizzes, and activities, enhancing the reader engagement and providing a more immersive learning experience. Da40 Operating Manual is one of the best book in our library for free trial. We provide copy of Da40 Operating Manual in digital format, so the resources that you find are reliable. There are also many Ebooks of related with Da40 Operating Manual. Where to download Da40 Operating Manual online for free? Are you looking for Da40 Operating Manual PDF? This is definitely going to save you time and cash in something you should think about.

Find Da40 Operating Manual :

how to lie with maps

peugeot 405 srdt manual
bosch alternator spare parts manual
~~04 jeep grand cherokee overland service manual~~
aban offshore limited iran warships gulf
bosch alternator voltage regulator wiring diagram
box cake recipe yellow
garden creepy crawlies british natural history s
honey and bear
labyrinths with path of thunder
2003 dodge dakota blower motor resistor wiring
activation code for holt mcdougal geometry
mini cooper service manual 2002
9 to 5 the musical script
meteorology today solution manual

Da40 Operating Manual :

download kglwin v3 66 ls plc programming software - Oct 28 2022
web plc lg master k120s cable installation lists the ls industrial systems co ltd k120s k7m dr t 20u k7m no limit to install the communication master on the expansion base
lg plc programming cable for master k120 master k80 - Nov 28 2022
web although the software has been released for a long time this is the latest version for plc master k glofa series programming it supports programming of the following model
how to make a rs232 cable for master k 120s plc youtube - Sep 07 2023
web aug 25 2018 how to make a rs232 cable for master k 120s plc in this video show you how to make a rs 232 cable this cable use for programming pc to plc this cable use for
lg master k 120s series user manual pdf download - Oct 08 2023
web page 1 user s manual lg programmable logic controller master k 120s series lg industrial systems when using lgis equipment thoroughly read this datasheet and
materials for master k lg programmable logic controller a d - May 03 2023
web it is impossible to use kld 150s with glofa gm series and it is the handy loader only for master k series you have to use

klc 015a cable for kld 150s to connect with

programmable logic controller ehaegypt com - Jan 19 2022

web plc lg master k120s cable installation downloaded from ftp bonide com by guest gael dominik the induction machine handbook springer the present book is based on the

master k120s plc part 01 connection upload monitor youtube - Aug 06 2023

web jul 28 2017 master k120s plc programmable logic controller plc introduction how to connect communication uploading monitoring basic plc programmed with ladder

plc lg master k120s cable installation projects techhut - May 23 2022

web plc lg master k120s cable installation 3 3 installing small water power schemes for isolated houses and communities this revised edition brings in new concepts developed

plc lg master k120s cable installation - Jun 23 2022

web plc lg master k120s cable installation downloaded from projects techhut tv by guest walsh monica chiral separation techniques lulu com sensors and actuators are

plc lg master k120s cable installation cdn writermag - Feb 17 2022

web do not bunch the control wires or communication cables with the main circuit or power wires or install them close to each other they should be installed 100mm 3 94inch or

foster pl - Mar 01 2023

web using rs 232c and rs 485 built in port master k120s can connects with external devices such as personal computers or monitoring devices and communicate 1 n with

plc lg master k120s cable installation bespoke cityam - Nov 16 2021

k120s plc manual pdf programmable logic controller scribd - Jan 31 2023

web aug 26 2018 no cable box no problems dismiss master k120s plc programmable logic controller plc introduction how to connect communication uploading

user s manual master k 120s series lg industrial - Jun 04 2023

web lg programmable logic controller a d d a combination module g7f adhb of products k120s series this module is to convert an analog input signal voltage or 10 times in

t solution master k120s user manual pdf download - Mar 21 2022

web plc lg master k120s cable installation downloaded from cdn writermag com by guest french rich emerging trends in science engineering and technology springer

plc lg master k120s cable installation darelova - Sep 26 2022
web 2 plc lg master k120s cable installation 2021 06 01 strategies and algorithms are discussed modified load flow calculations for a power system in the presence of
ls electric co ltd - Apr 02 2023
web foster pl
plc lg master k120s cable installation copy ftp bonide - Dec 18 2021
web plc lg master k120s cable installation comm fails using a rs232c null modem cable to connect an lg master k120s to the pc on lgis do i have to write a special code in the
plc lg master k120s cable installation download only - Jul 25 2022
web 2 plc lg master k120s cable installation 2022 09 08 appliances leak tests protected electrical equipment laundry equipment endurance testing impact testing stability
how to upload and download master k120s plc part 01 - Dec 30 2022
web name lg plc programming cable for master k120 master k80 series plc to pc communication cable usb lg plc programming cable for master k120 master
plc lg master k120s cable installation download only - Apr 21 2022
web summary of contents for t solution master k120s page 1 master k120s programmable logic controller read this manual carefully before installing wiring
plc connection guide cermate - Jul 05 2023
web lg master k120s cpu port with panelmaster rs232 serial port rs485 serial port 1 plc k120s cpu linking setting if you wish to link with lg master k series plc via rs232
plc lg master k120s cable installation download only ftp - Aug 26 2022
web plc lg master k120s cable installation downloaded from retailer bonide com by guest kenyon kim sensors actuators and their interfaces springer science business media
multivariate lieferantenbewertung empirisch gestu - Aug 06 2022
web 2 multivariate lieferantenbewertung empirisch gestu 2019 10 14 stafford beer worked out the scientific laws that govern any viable system they constitute the basis for this
multivariate lieferantenbewertung empirisch gestu - Nov 28 2021
web mar 20 2023 multivariate lieferantenbewertung empirisch gestu 1 11 downloaded from uniport edu ng on march 20 2023 by guest multivariate lieferantenbewertung
multivariate lieferantenbewertung empirisch gestã tze - Sep 07 2022

web jun 16 2023 multivariate lieferantenbewertung empirisch gestã tze konzeption eines anforderungsgerechten bewertungssystems gabler edition wissenschaft by christian g

multivariate lieferantenbewertung empirisch gestütze - May 15 2023

web multivariate lieferantenbewertung empirisch gestütze konzeption eines anforderungsgerechten bewertungssystems gabler edition wissenschaft janker

multivariate lieferantenbewertung empirisch gestütze - Aug 18 2023

web der autor entwickelt ein neues leistungsfähiges modell der lieferantenbewertung und zeigt wie die bewertung und auswahl eines bzw mehrerer optimaler lieferanten

multivariate lieferantenbewertung empirisch gestütze - Mar 13 2023

web lieferantenbewertung empirisch gestütze multivariate lieferantenbewertung empirisch gestütze multivariate lieferantenbewertung von christian g janker pdf multivariate

multivariate lieferantenbewertung empirisch gestu e - Jun 04 2022

web multivariate lieferantenbewertung empirisch gestu 1 multivariate lieferantenbewertung empirisch gestu when people should go to the ebook stores

multivariate lieferantenbewertung empirisch gestu - Dec 30 2021

web aug 6 2023 multivariate lieferantenbewertung empirisch gestu 1 1 downloaded from uniport edu ng on august 6 2023 by guest getting the books multivariate

multivariate lieferantenbewertung empirisch gestu pdf - Jul 05 2022

web introduction multivariate lieferantenbewertung empirisch gestu pdf download only the mobility revolution in the automotive industry dr sebastian wedeniwski 2015

multivariate lieferantenbewertung empirisch gestu - Apr 02 2022

web apr 13 2023 multivariate lieferantenbewertung empirisch gestu 2 12 downloaded from uniport edu ng on april 13 2023 by guest into the links between wealth and happiness

multivariate lieferantenbewertung empirisch gestütze - Jun 16 2023

web multivariate lieferantenbewertung empirisch gestütze konzeption eines anforderungsgerechten bewertungssystems ebook written by christian g janker

multivariate lieferantenbewertung empirisch gestu - Oct 28 2021

web mar 13 2023 multivariate lieferantenbewertung empirisch gestu 1 12 downloaded from uniport edu ng on march 13 2023 by guest multivariate lieferantenbewertung

multivariate lieferantenbewertung empirisch gestütze - Jan 11 2023

web multivariate lieferantenbewertung empirisch gestütze konzeption eines anforderungsgerechten bewertungssystems gabler edition wissenschaft 74 99 nur

multivariate lieferantenbewertung empirisch gestützte - Apr 14 2023

web multivariate lieferantenbewertung empirisch gestützte konzeption eines anforderungsgerechten bewertungssystems janker christian g 2008

multivariate lieferantenbewertung empirisch gestu - Jan 31 2022

web sep 13 2022 multivariate lieferantenbewertung empirisch gestu 2 10 downloaded from staging friends library org on september 13 2022 by guest time with a vengeance

multivariate lieferantenbewertung 9783824482788 - Dec 10 2022

web multivariate lieferantenbewertung empirisch gestütze konzeption eines anforderungsgerechten bewertungssystems is written by christian g janker and

multivariate lieferantenbewertung empirisch gestu michael - Jul 17 2023

web multivariate lieferantenbewertung empirisch gestu multivariate lieferantenbewertung empirisch gestu 3 downloaded from nysm pfi org on 2020 11

multivariate lieferantenbewertung empirisch gestu - May 03 2022

web multivariate lieferantenbewertung empirisch gestu 1 multivariate lieferantenbewertung empirisch gestu but stop in the works in harmful downloads

multivariate lieferantenbewertung empirisch gestu - Sep 26 2021

web may 5 2023 merely said the multivariate lieferantenbewertung empirisch gestu is universally compatible with any devices to read competing for capital bruce w marcus

multivariate lieferantenbewertung empirisch gestütze - Feb 12 2023

web multivariate lieferantenbewertung empirisch gestütze konzeption eines anforderungsgerechten bewertungssystems ausgabe 2 ebook written by christian g

multivariate lieferantenbewertung empirisch gestütze - Oct 08 2022

web multivariate lieferantenbewertung empirisch gestütze konzeption eines anforderungsgerechten bewertungssystems gabler edition wissenschaft by christian g

multivariate lieferantenbewertung empirisch gestutze alibris - Nov 09 2022

web buy multivariate lieferantenbewertung empirisch gestutze konzeption eines anforderungsgerechten bewertungssystems by christian g janker online at alibris we

multivariate lieferantenbewertung empirisch gestu - Mar 01 2022

web multivariate lieferantenbewertung empirisch gestu 1 multivariate lieferantenbewertung empirisch gestu when people should go to the book stores search foundation by shop shelf by shelf it is essentially problematic this is why we give the ebook compilations in this website it will utterly ease you to look guide multivariate

biol101 principles of biology liberty online academy - Feb 14 2022

web eight weekly quizzes will contain 24 multiple choice questions and 1 fill in the blank question that come solely from the textbook and will be open book open notes the quizzes will have a time

notes biol 101 quiz 7 biol101 quiz 7 liberty university - Mar 30 2023

web prevent resits and get higher grades by finding the best notes resources available written by your fellow students at biol 101 quiz 7 biol101 quiz 7 liberty university

study guide quiz 7 week 7 docx biol 101 study guide quiz - Aug 03 2023

web view test prep study guide quiz 7 week 7 docx from biol 101 at liberty university online academy biol 101 study guide quiz 7 quiz preparation tasks 13 life is ultimate art 13 1 life and its

biol 101 quiz 7 new 2021 liberty university stuvia - Jun 01 2023

web jun 1 2021 biol 101 quiz 7 new 2021 liberty university biol101 quiz 7 new 2021 liberty university 100 money back guarantee immediately available after payment both online and in pdf no strings attached

principles of biology biol 101 liberty university online - Dec 27 2022

web sep 25 2023 course description an examination of the fundamental characteristics common among living things emphasis is placed upon studies of the cell energy metabolism reproduction heredity ecology

biol 101 quiz 7 nerdy quizzes - Jul 02 2023

web in the early pages of the genesis record the first stage of life history could best be described as free purchase answers biol 101 quiz 7 liberty university francis crick s theory of directed panspermia states that natural selection is cybernetically blind this means that

biol 101 quiz 7 biol101 quiz 7 latest 2022 liberty university - Apr 18 2022

web apr 27 2022 biol 101 quiz 1 2 3 4 5 6 7 8 biol101 quiz 1 to quiz 8 latest 2022 liberty university 100 correct questions and answers 35 45 0 x sold 8 items bundle contains 8 documents

biology 101 life by design liberty university course hero - Jul 22 2022

web access study documents get answers to your study questions and connect with real tutors for biology 101 life by design at liberty university upload to study expert help study resources log in join schools liberty university biol 101 quiz 7 2019 pdf 6 pages biol 101 quiz 8 2019 revised pdf liberty university

biol 101 quiz 7 3 versions biol101 quiz 7 latest 2021 - May 20 2022

web biol 101 quiz 7 3 versions biol101 quiz 7 latest 2021 principles of biology liberty university verified answers 100 correct biol 101 quiz 7

liberty university biol 101 final exam flashcards quizlet - Apr 30 2023

web a observe phenomenon b develop theories c make predictions d devise test of predictions e carry out tests and analyze results

biol 101 quiz 7 docx question 1 0 out of 3 2 points - Oct 25 2022

web solutions available liberty university rlgn 104 trending in biol 101 electronegativity and molecular properties lab worksheet docx solutions available liberty university online academy

biol 101 study guide quiz 7 liberty university stuvia - Aug 23 2022

web apr 19 2020 biol 101 study guide quiz 7 liberty universitybiol 101 study guide quiz 7 liberty university 100 satisfaction guarantee immediately available after payment both online and in pdf no strings attached

liberty university biol 101 study guide quiz 7 solutions answers - Sep 23 2022

web mar 8 2017 liberty university biol 101 study guide quiz 7 solutions answers slideshare download as a pdf or view online for free

biol 101 quiz 7 biol101 quiz 7 100 correct liberty university - Jun 20 2022

web dec 20 2020 biol 101 quiz 7 biol101 quiz 7 100 correct liberty university 100 money back guarantee immediately available after payment both online and in pdf no strings attached sell

biol 101 intro to biology liberty university course hero - Mar 18 2022

web access study documents get answers to your study questions and connect with real tutors for biol 101 intro to biology at liberty university upload to study expert help

life is ultimate art study guide quiz 7 for biol 101 - Oct 05 2023

web life is ultimate art study guide quiz 7 for biol 101 biol guide quiz preparation answers and is studocu quiz 7 study guide biol 101 study guide quiz quiz preparation tasks 13 your answers and notes life is ultimate art 13 1 life and its diversity ultimate art skip to document

biol101 study guide quiz 7 docx biol 101 study guide - Nov 25 2022

web view biol101 study guide quiz 7 docx from biol 101 at liberty university biol 101 study guide quiz 7 quiz preparation tasks 13 your answers and notes life is ultimate art 13 1 life and its

biol 101 liberty university quiz 7 flashcards quizlet - Sep 04 2023

web 1 77 flashcards learn test match q chat created by mary morris peters terms in this set 77 cathedral cells required for construction and information information is expressed in cellular expression outside and inside the cell in cells this

information is stored and expressed from within the cell itself information expression

biol 101 study guide quiz 7 liberty university stuvia - Feb 26 2023

web get higher grades by finding the best biol 101 study guide quiz 7 liberty university notes available written by your fellow students at nit iim

biol 101 exam 2 bullock liberty university flashcards - Jan 28 2023

web biol 101 exam 2 bullock liberty university 4 7 6 reviews flashcards learn test match flashcards learn test match q chat created by bailyn123 share share terms in this set 107 what is the purpose of the human body as stated on the slides to sustain itself to reproduce itself to glorify god