3 — Pulley
4 — Hub
5 — Water Pump
6 — Gasket
7 — Bolt
8 — Eccentric
9 — Indicator
10 — Cover
11 — Slinger
12 — Timing Chain
13 — Gear, Crankshaft
14 — Gear, Camshaft
15 — Camshaft
16 — Pin
17 — Bolt
18 — Baffle
19 — Bracket
20 — Plug
21 — Seal
22 — Baffle
23 — Gasket
24 — Tube
25 — Cap
26 — Intake Manifold
27 — Thermostat
28 — Gasket
29 — Hose
30 — Clamp
31 — Outlet
32 — Bolt
33 — Switch
34 — Plug
35 — Bolt
36 — Push Rod
37 — Gasket
38 — Distributor
39 — Wire
40 — Clamp
41 — Head Gasket
42 — Head
43 — Spring
44 — Rocker Arm
45 — Push Rod Pivot
46 — Valve Cover Gasket
47 — Bolt
48 — Cover
49 — Connecting Rod
50 — Nut
51 — Bearing
52 — Bolt
53 — Piston & Pin
54 — Valve Lifter
55 — Plug
56 — Plug
57 — Plug
58 — Pin
59 — Exhaust Manifold
60 — Bolt
61 — Spark Plug
62 — Crankshaft
63 — Bearing
64 — Cap
65 — Bolt
66 — Oil Pan Gasket
67 — Oil Pan
68 — Oil Pump
69 — Packing
70 — Cover
71 — Flywheel
72 — Boot
73 — Fork
74 — Stud
75 — Housing
76 — Starting Motor
77 — Bolt
78 — Switch
79 — Brace
80 — Shim
81 — Bolt

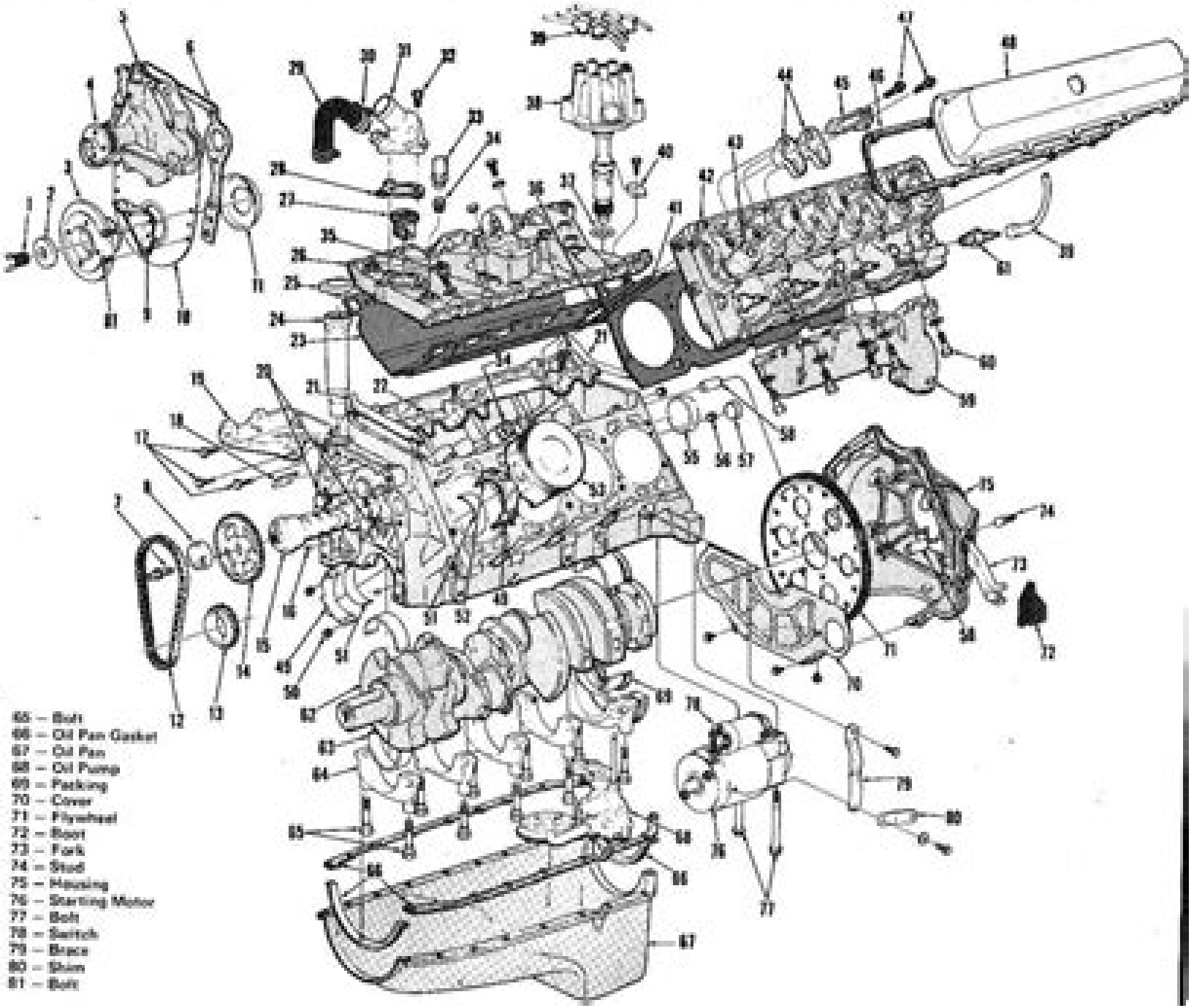

Chevy 350 Engine Service Manual

A Loxley

Chevy 350 Engine Service Manual:

Getting the books **Chevy 350 Engine Service Manual** now is not type of inspiring means. You could not lonely going taking into account books stock or library or borrowing from your friends to right of entry them. This is an enormously simple means to specifically get lead by on-line. This online revelation Chevy 350 Engine Service Manual can be one of the options to accompany you in imitation of having supplementary time.

It will not waste your time. understand me, the e-book will definitely tell you other issue to read. Just invest tiny era to approach this on-line revelation **Chevy 350 Engine Service Manual** as skillfully as review them wherever you are now.

https://marketlab.rehabmart.com/files/uploaded-files/Documents/1997%20Sunfire%20Owners%20Manual.pdf

Table of Contents Chevy 350 Engine Service Manual

1. Understanding the eBook Chevy 350 Engine Service Manual
    - The Rise of Digital Reading Chevy 350 Engine Service Manual
    - Advantages of eBooks Over Traditional Books
2. Identifying Chevy 350 Engine Service Manual
    - Exploring Different Genres
    - Considering Fiction vs. Non-Fiction
    - Determining Your Reading Goals
3. Choosing the Right eBook Platform
    - Popular eBook Platforms
    - Features to Look for in an Chevy 350 Engine Service Manual
    - User-Friendly Interface
4. Exploring eBook Recommendations from Chevy 350 Engine Service Manual
    - Personalized Recommendations
    - Chevy 350 Engine Service Manual User Reviews and Ratings
    - Chevy 350 Engine Service Manual and Bestseller Lists
5. Accessing Chevy 350 Engine Service Manual Free and Paid eBooks

    - Chevy 350 Engine Service Manual Public Domain eBooks
    - Chevy 350 Engine Service Manual eBook Subscription Services
    - Chevy 350 Engine Service Manual Budget-Friendly Options
6. Navigating Chevy 350 Engine Service Manual eBook Formats
    - ePub, PDF, MOBI, and More
    - Chevy 350 Engine Service Manual Compatibility with Devices
    - Chevy 350 Engine Service Manual Enhanced eBook Features
7. Enhancing Your Reading Experience
    - Adjustable Fonts and Text Sizes of Chevy 350 Engine Service Manual
    - Highlighting and Note-Taking Chevy 350 Engine Service Manual
    - Interactive Elements Chevy 350 Engine Service Manual
8. Staying Engaged with Chevy 350 Engine Service Manual
    - Joining Online Reading Communities
    - Participating in Virtual Book Clubs
    - Following Authors and Publishers Chevy 350 Engine Service Manual
9. Balancing eBooks and Physical Books Chevy 350 Engine Service Manual
    - Benefits of a Digital Library
    - Creating a Diverse Reading Collection Chevy 350 Engine Service Manual
10. Overcoming Reading Challenges
    - Dealing with Digital Eye Strain
    - Minimizing Distractions
    - Managing Screen Time
11. Cultivating a Reading Routine Chevy 350 Engine Service Manual
    - Setting Reading Goals Chevy 350 Engine Service Manual
    - Carving Out Dedicated Reading Time
12. Sourcing Reliable Information of Chevy 350 Engine Service Manual
    - Fact-Checking eBook Content of Chevy 350 Engine Service Manual
    - Distinguishing Credible Sources
13. Promoting Lifelong Learning
    - Utilizing eBooks for Skill Development

    - Exploring Educational eBooks
14. Embracing eBook Trends
    - Integration of Multimedia Elements
    - Interactive and Gamified eBooks

Chevy 350 Engine Service Manual Introduction

Free PDF Books and Manuals for Download: Unlocking Knowledge at Your Fingertips In todays fast-paced digital age, obtaining valuable knowledge has become easier than ever. Thanks to the internet, a vast array of books and manuals are now available for free download in PDF format. Whether you are a student, professional, or simply an avid reader, this treasure trove of downloadable resources offers a wealth of information, conveniently accessible anytime, anywhere. The advent of online libraries and platforms dedicated to sharing knowledge has revolutionized the way we consume information. No longer confined to physical libraries or bookstores, readers can now access an extensive collection of digital books and manuals with just a few clicks. These resources, available in PDF, Microsoft Word, and PowerPoint formats, cater to a wide range of interests, including literature, technology, science, history, and much more. One notable platform where you can explore and download free Chevy 350 Engine Service Manual PDF books and manuals is the internets largest free library. Hosted online, this catalog compiles a vast assortment of documents, making it a veritable goldmine of knowledge. With its easy-to-use website interface and customizable PDF generator, this platform offers a user-friendly experience, allowing individuals to effortlessly navigate and access the information they seek. The availability of free PDF books and manuals on this platform demonstrates its commitment to democratizing education and empowering individuals with the tools needed to succeed in their chosen fields. It allows anyone, regardless of their background or financial limitations, to expand their horizons and gain insights from experts in various disciplines. One of the most significant advantages of downloading PDF books and manuals lies in their portability. Unlike physical copies, digital books can be stored and carried on a single device, such as a tablet or smartphone, saving valuable space and weight. This convenience makes it possible for readers to have their entire library at their fingertips, whether they are commuting, traveling, or simply enjoying a lazy afternoon at home. Additionally, digital files are easily searchable, enabling readers to locate specific information within seconds. With a few keystrokes, users can search for keywords, topics, or phrases, making research and finding relevant information a breeze. This efficiency saves time and effort, streamlining the learning process and allowing individuals to focus on extracting the information they need. Furthermore, the availability of free PDF books and manuals fosters a culture of continuous learning. By removing financial barriers, more people can access educational resources and pursue lifelong learning, contributing to personal growth and professional development. This democratization of knowledge promotes intellectual curiosity and

empowers individuals to become lifelong learners, promoting progress and innovation in various fields. It is worth noting that while accessing free Chevy 350 Engine Service Manual PDF books and manuals is convenient and cost-effective, it is vital to respect copyright laws and intellectual property rights. Platforms offering free downloads often operate within legal boundaries, ensuring that the materials they provide are either in the public domain or authorized for distribution. By adhering to copyright laws, users can enjoy the benefits of free access to knowledge while supporting the authors and publishers who make these resources available. In conclusion, the availability of Chevy 350 Engine Service Manual free PDF books and manuals for download has revolutionized the way we access and consume knowledge. With just a few clicks, individuals can explore a vast collection of resources across different disciplines, all free of charge. This accessibility empowers individuals to become lifelong learners, contributing to personal growth, professional development, and the advancement of society as a whole. So why not unlock a world of knowledge today? Start exploring the vast sea of free PDF books and manuals waiting to be discovered right at your fingertips.

FAQs About Chevy 350 Engine Service Manual Books

How do I know which eBook platform is the best for me? Finding the best eBook platform depends on your reading preferences and device compatibility. Research different platforms, read user reviews, and explore their features before making a choice. Are free eBooks of good quality? Yes, many reputable platforms offer high-quality free eBooks, including classics and public domain works. However, make sure to verify the source to ensure the eBook credibility. Can I read eBooks without an eReader? Absolutely! Most eBook platforms offer web-based readers or mobile apps that allow you to read eBooks on your computer, tablet, or smartphone. How do I avoid digital eye strain while reading eBooks? To prevent digital eye strain, take regular breaks, adjust the font size and background color, and ensure proper lighting while reading eBooks. What the advantage of interactive eBooks? Interactive eBooks incorporate multimedia elements, quizzes, and activities, enhancing the reader engagement and providing a more immersive learning experience. Chevy 350 Engine Service Manual is one of the best book in our library for free trial. We provide copy of Chevy 350 Engine Service Manual in digital format, so the resources that you find are reliable. There are also many Ebooks of related with Chevy 350 Engine Service Manual. Where to download Chevy 350 Engine Service Manual online for free? Are you looking for Chevy 350 Engine Service Manual PDF? This is definitely going to save you time and cash in something you should think about.

Find Chevy 350 Engine Service Manual :

~~1997 sunfire owners manual~~
improved street utilization through traf
fishermans summer
aban offshore limited iran khodro diesel
mini cooper service manual bentley publishers
bus driver test questions answers
section 3 1 the rock cycle answer key
aprilaire steam humidifier installation manual
the russojapanese war 00
~~manuale di officina gilera 150~~
1997 suburban repair manua
~~b737 ng steering valve drawing~~
yamaha cdr s1000 compact disc recorder service manual
manuale del recupero strutturale e antisismico
~~1996 service manual mercury 50 elpt 4s~~

Chevy 350 Engine Service Manual :

i saw it first jungle a family spotting game magma for laurence king - Apr 26 2023
i saw it first jungle a family spotting game magma for laurence king publishing laurence king selmes caroline amazon in books
i saw it first jungle laurence king publishing us - Oct 21 2022
perfect for families an exciting fast paced game for groups of children or adultsquick to learn and play simple to learn addictive to playdetailed illustrations features 300 fun and unusual jungle creaturesthree hundred jungle animals populate the board of this carefully engineered game
i saw it first jungle a family spotting game magma for laurence king - Oct 01 2023
jungle a family spotting game magma for laurence king game 19 nov 2018 three hundred jungle animals populate the board of this carefully engineered game some are familiar like the leopard or the hippopotamus others less so like the eyelash viper or the giraffe weevil

i saw it first jungle laurence king publishing author - Jul 18 2022
nov 19 2018 publisher s synopsis introducing the board game winner at the 2020 independent toy awards three hundred jungle animals populate the board of this carefully engineered game some are familiar like the leopard or the hippopotamus others less so like the eyelash viper or the giraffe weevil
i saw it first jungle a family spotting game magma for laurence king - Aug 31 2023
i saw it first jungle a family spotting game magma for kitabı en iyi fiyatla burada tıkla i saw it first jungle a family spotting game magma for eserini hızlı ve kolay bir şekilde satın al
i saw it first jungle by caroline selmes waterstones - May 28 2023
nov 19 2018 hobbies quiz books games board games popular science nature nature writing wildlife zoom i saw it first jungle a family spotting game magma for laurence king caroline selmes illustrator sign in to write a review 19 99 cards published 19 11 2018
magma for laurence king ser i saw it first jungle a family - Feb 10 2022
find many great new used options and get the best deals for magma for laurence king ser i saw it first jungle a family spotting game by laurence king publishing 2018 game at the best online prices at ebay free shipping for many products
i saw it first jungle a family spotting game magma for laurence king - Sep 19 2022
selmes caroline i saw it first jungle a family spotting game magma for laurence king jetzt kaufen kundrezensionen und sterne
amazon co uk customer reviews i saw it first jungle a family - Jan 24 2023
find helpful customer reviews and review ratings for i saw it first jungle a family spotting game magma for laurence king at amazon com read honest and unbiased product reviews from our users
i saw it first jungle a family spotting game booktopia - Feb 22 2023
booktopia has i saw it first jungle a family spotting game magma for laurence king by laurence king publishing buy a discounted puzzle of i saw it first jungle a family spotting game online from australia s leading online bookstore
jungle i saw it first a family spotting game by laurence king - Mar 14 2022
oct 1 2018 product details three hundred jungle animals from the aardvark to the wire tailed manakin populate the board of this game some are familiar like the leopard or the hippopotamus others less so like the eyelash viper or the giraffe weevil pull a counter from the bag and be the first to spot that animal
i saw it first jungle a family spotting game amazon com - Dec 23 2022
nov 20 2018 game 29 99 11 new from 24 41 three hundred jungle animals from the aardvark to the wire tailed manakin populate the board of this game some are familiar like the leopard or the hippopotamus others less so like the eyelash viper or the giraffe weevil pull a counter from the bag and be the first to spot that animal

i saw it first jungle a family spotting game publishing laurence - May 16 2022
i saw it first jungle a family spotting game publishing laurence king selmes caroline amazon co uk toys games
i saw it first publishing laurence king amazon co uk outlet - Apr 14 2022
jul 3 2021 game play pull a counter from the box featuring one of the 300 characters in this game and be the first to spot that character on the board charming illustrations by caroline selmes 300 ancient egyptians from gods and goddesses to pharaohs and sphynxes populate the board of this game
i saw it first jungle a family spotting game magma for laurence king - Nov 21 2022
three hundred jungle animals from the aardvark to the wire tailed manakin populate the board of this game some are familiar like the leopard or the hippopotamus others less so like the eyelash viper or the giraffe weevil pull a counter from the bag and be the first to
i saw it first jungle a family spotting game magma for laurence king - Mar 26 2023
i saw it first jungle a family spotting game magma for laurence king at abebooks co uk isbn 10 1786272431 isbn 13 9781786272430 laurence king publishing 2018
i saw it first jungle laurence king publishing uk - Jul 30 2023
300 jungle animals are hiding on this gameboard can you be the first to spot the giraffe or even the giraffe weevil pull a counter from the box and see who can find that animal first now in a square box i saw it first jungle includes a double sided hexagonal board and 300 counters with charming animal illustrations by caroline selmes
i saw it first jungle a family spotting game magma for laurence king - Jun 16 2022
nov 20 2018 amazon□□□□□□i saw it first jungle a family spotting game magma for laurence king □□□□□□□ □□amazon□□□□□□□□ □□□□ selmes caroline□□□□ □□□□□□□□□□□□□□□□□
i saw it first jungle laurence king publishing uk - Jun 28 2023
pull a counter from the box featuring one of the 300 animals in this game and be the first to spot that animal on the board coming in a triangular box with a hexagonal double sided board this game features charming illustrations by caroline selmes
i saw it first jungle a family spotting game magma for laurence king - Aug 19 2022
i saw it first jungle a family spotting game magma for laurence king selmes caroline amazon de toys
war latest ukraine captures another village in east kim jong un - Sep 22 2021
web uranium war energy and the rock that shaped the world uranium is a common element in the earth s crust and the only naturally occurring mineral with the power to
uranium war energy and the rock that shaped the world - Oct 04 2022
web uranium war energy and the rock that shaped the world author tom zoellner summary uranium is a common element in

the earth s crust and the only naturally

uranium war energy and the rock that shaped the world - Apr 29 2022

web the astonishing biography of a mineral that can sustain our world or destroy it uranium occurs naturally in the earth s crust yet holds the power to end all life on the planet this

uranium war energy and the rock that shaped the world - Dec 06 2022

web march 5 2009 when it comes to press coverage uranium does pretty well among its peers on the periodic table surely strontium or seaborgium or even manganese would kill for

uranium war energy and the rock that shaped the world - Jul 01 2022

web oct 1 2009 uranium war energy and the rock that shaped the world is a book that will provide a broad overview of the tremendous impact of element 92 keywords

review uranium war energy and the rock that shaped the - Jul 13 2023

web mar 18 2009 uranium war energy and the rock that shaped the world by tom zoellner viking 26 95 in the 1500s bohemian miners stumbled upon a mineral they

uranium war energy and the rock that shaped the world by - Jun 12 2023

web may 22 2009 by science news may 22 2009 at 11 45 am this radioactive substance has offered promise and generated peril throughout history uranium war energy

uranium war energy and the rock that shaped the world - Sep 03 2022

web a problem for miners in the middle ages an inspiration to novelists and a boon to medicine a devastat ing weapon at the end of world war ii and eventually a polluter killer excuse

uranium war energy and the rock that shaped the world - Jan 27 2022

web sep 7 2023 advertisement the u s move to supply ukraine with depleted uranium rounds comes after a controversial decision to provide cluster munitions which human

uranium war energy and the rock that shaped the world - Aug 02 2022

web may 6 2010 buy uranium war energy and the rock that shaped the world by tom zoellner isbn 9780143116721 from amazon s book store everyday low prices and

uranium war energy and the rock that shaped the - May 11 2023

web mar 5 2009 the fascinating story of the most powerful source of energy the earth can yield uranium is a common element in the earth s crust and the only naturally occurring

uranium war energy and the rock that shaped the world - Mar 29 2022

web feb 9 2015 request pdf on feb 9 2015 danielle jensen ryan published uranium war energy and the rock that shaped the

world t zoellner viking penguin new

what are depleted uranium rounds that the u s is sending to - Dec 26 2021

web sep 7 2023 depleted uranium munitions as well as depleted uranium enhanced armour were used by us tanks in the 1991 gulf war against iraq s t 72 tanks and again in the

depleted uranium munitions what are they and what risks do - Nov 24 2021

web uranium is a chemical element with symbol u and atomic number 92 it is a silvery grey metal in the actinide series of the periodic table a uranium atom has 92 protons and 92

uranium war energy and the rock that shaped the world t - Feb 25 2022

web the fascinating story of the most powerful source of energy the earth can yield uranium is a common element in the earth s crust and the only naturally occurring mineral with the

uranium wikipedia - Oct 24 2021

web sep 15 2023 ukraine s military earlier confirmed the liberation of andriivka in the eastern donetsk region see 6 18 post estimated to have a pre war population of fewer than

uranium war energy and the rock that shaped the world - Aug 22 2021

review uranium war energy and the rock that shaped the - Jan 07 2023

web mar 5 2009 3 87 2 259 ratings196 reviews the fascinating story of the most powerful source of energy the earth can yield uranium is a common element in the earth s crust

uranium war energy and the rock that shaped the world - Mar 09 2023

web uranium is a common element in the earth s crust and the only naturally occurring mineral with the power to end all life on the planet after world war ii it reshaped the global

uranium war energy and the rock that shaped the world by - May 31 2022

web feb 7 2009 uranium war energy and the rock that shaped the world kindle edition by tom zoellner author format kindle edition 4 4 220 ratings see all formats and

uranium war energy and the rock that shaped the world by - Aug 14 2023

web oct 1 2009 uranium war energy and the rock that shaped the world is a book that will provide a broad overview of the tremendous impact of element 92 keywords audience general public keywords domain public understanding outreach

book review uranium war energy and the rock that - Nov 05 2022

web feb 23 2010 overview the astonishing biography of a mineral that can sustain our world or destroy it uranium occurs naturally in the earth s crust yet holds the power to end all

uranium war energy and the rock that shaped the world - Apr 10 2023
web description uranium is a common element in the earth s crust and the only naturally occurring mineral with the power to end all life on the planet after world war ii it

uranium war energy and the rock that shaped the world - Feb 08 2023
web mar 18 2009 the current erosion level of this igneous complex presents a wide variety of contrasting extrusive and intrusive rocks from shallow to deep source regions providing

class 11 physics chapter 6 work energy and power 01 - Jun 06 2023
web jul 24 2018 class 11 physics chapter 6 work energy and power 01 introduction formulae for work iit jee for pdf notes and best assignments visit live classes video lectures test series

work energy and power iopspark - Feb 02 2023
web use the following equations work done force distance moved in direction of force change in gravitational energy mgh power work done time taken power rate of energy transfer power force velocity efficiency

work power and energy in physics class 11 physics wallah - Oct 10 2023
web work power and energy in physics class 11 work work power and energy of class 11 the work w done by a constant force f when its point of application undergoes a displacement s is defined to be w f s cos θ 8 1 where θ is the angle between and as indicated in figure 8 1

work energy and power class 11 notes physics chapter 6 - Jul 27 2022
web jun 16 2022 the energy of a body is its capacity to do work anything which is able to do work is said to possess energy energy is measured in the same unit as that of work namely joule mechanical energy is of two types kinetic energy and potential energy

work energy and power basic introduction youtube - May 05 2023
web apr 5 2021 this physics video tutorial provides a basic introduction into work energy and power it discusses the work energy principle the relationship between work force displacement as well as

physics notes class 11 chapter 6 work energy and power - May 25 2022
web iii electric potential energy the electric potential energy of two point charges ql and q l separated by a distance r in vacuum is given by u 1 4πΣ 0 q 1 q 2 r here 1 4πΣ 0 9 0 10 10 n m2 c2 constant work energy theorem work done by a force in displacing a body is equal to change in its kinetic energy where k i

work energy and power class 11 physics notes - Sep 09 2023
web mar 28 2021 work energy theorem states that the change in kinetic energy of a body is equal to work done let us consider a body of mass m moving with initial velocity u at a point if force f is applied on it it moves with constant

acceleration a

7 work energy and energy resources physics libretexts - Jan 01 2023

web feb 20 2022 7 2 kinetic energy and the work energy theorem the net work wnet w n e t is the work done by the net force acting on an object work done on an object transfers energy to the object the translational kinetic energy of an object of mass m m moving at speed v v is ke 1 2mv2 k e 1 2 m v 2 the work energy theorem states that the net

work and energy physics library science khan academy - Sep 28 2022

web physics library 19 units 12 skills unit 1 one dimensional motion unit 2 two dimensional motion unit 3 forces and newton s laws of motion unit 4 centripetal force and gravitation unit 5 work and energy unit 6 impacts and linear momentum unit 7 torque and angular momentum unit 8 oscillations and mechanical waves

ncert solutions for class 11 physics chapter 6 work energy and power - Mar 23 2022

web compute the a work done by the applied force in 10 s b work done by friction in 10 s c work done by the net force on the body in 10 s d change in kinetic energy of the body in 10 s and interpret your results answer a we know that u k frictional force normal reaction frictional force u k x normal reaction

ncert solutions for class 11 physics chapter 6 work energy and power - Feb 19 2022

web ncert solutions for class 11 physics chapter 6 free pdf download according to the cbse syllabus 2023 24 this chapter has been renumbered as chapter 5 ncert solutions class 11 physics chapter 6 work energy and powerare provided in pdf format for easy access and download

work energy and power class 11 notes physics chapter 6 - Nov 30 2022

web may 15 2023 power is defined as the time rate at which work is done or energy is transferred the average power of a force is defined as the ratio of the work w to the total time t taken p av w t p a v w t the instantaneous power is defined as the limiting value of the average power as time interval approaches zero

work energy and power class 11 physics india khan academy - Jul 07 2023

web science class 11 physics india unit 10 work energy and power about this unit energy is a word that s used a lot here you ll learn about how it s one of the most useful concepts in physics along the way we ll talk about work kinetic energy potential energy and conservation of energy introduction to work learn work example problems

work energy and power crash course physics 9 youtube - Mar 03 2023

web may 26 2016 work is a word that has a little bit of a different meaning in physics and today shini is going to walk us through it also energy and power produced in collaboration with pbs digital

9 1 work power and the work energy theorem openstax - Aug 08 2023

web the work energy theorem in physics the term work has a very specific definition work is application of force f f to move

an object over a distance d in the direction that the force is applied work w is described by the equation w fd w f d

work energy and power class 11 leverage edu - Apr 23 2022

web mar 10 2023 the rate at which work is performed is known as power this is a measure of energy consumed per unit of time formula p w t where p power w work done t time taken definition of work energy theorem the work done on a body by applying force is equal to the change in kinetic energy of the body this is defined as work

work energy and power definition examples formula units - Oct 30 2022

web work energy and power are fundamental concepts of physics work is said to be done when a force push or pull applied to an object causes a displacement of the object we define the capacity to do the work as energy

revision notes class 11 physics work energy and power - Jun 25 2022

web nov 2 2023 cbse class 11 physics notes chapter 6 work power and energy in this context we are going to discuss the list of content on what is work power and energy when we talk about physics the chapter of work power and energy is one of the most important chapters which involves concepts of mechanics

physics 11 energy mr lam s classroom vancouver school - Aug 28 2022

web may 2 2023 quiz work conservation of energy with heat notes power efficiency worksheet power and efficiency zitzewitz 10 1 10 2 8 11 may 2023 thu lab power due today on teams worksheet more to work on worksheet energy cooperative group review 9 12 may 2023 fri energy provincial exam package in class questions

work energy and power the physics classroom - Apr 04 2023

web work energy and power lesson 1 basic terminology and concepts definition and mathematics of work calculating the amount of work done by forces potential energy kinetic energy mechanical energy power lesson 2 the work energy relationship internal vs external forces analysis of situations involving external forces